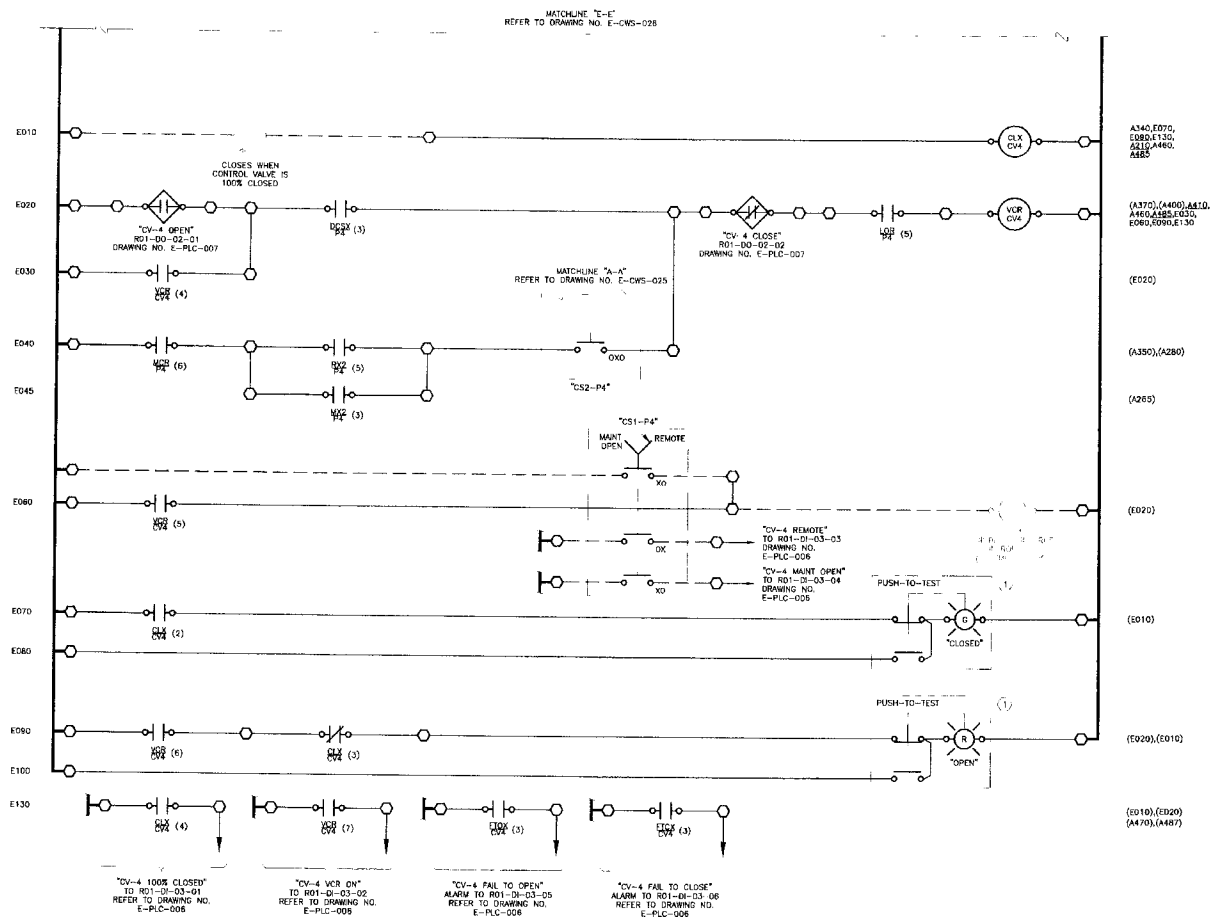


## WIRING AND TERMINAL DEVICE LEGEND:

— — INDICATES WIRING BETWEEN PANELS OR TO A FIELD MOUNTED DEVICE.

○ DEVICE WIRING TERMINAL

⬡ PROPOSED TERMINAL BLOCK LOCATED IN PROPOSED MAIN CONTROL PANEL "MCP-001". ANY DEVICE SHOWN WITH DEVICE WIRING TERMINALS CONNECTED DIRECTLY TO THESE SYMBOLS WITH SOLID LINES IS ALSO LOCATED IN MAIN CONTROL PANEL "MCP-001"

## KEY NOTES:

(1) INDICATING PILOT LIGHT WITH INTEGRAL MOMENTARY ACTION "PUSH-TO-TEST" PUSHBUTTON. REFER TO ELECTRICAL SPECIFICATIONS.

## GENERAL NOTES:

1 LIGHT LINEWORK DENOTES EXISTING EQUIPMENT DARK LINEWORK DENOTES PROPOSED EQUIPMENT

## REFERENCE DRAWINGS:

E-CWS-022 – E-CWS-026 – PUMP CONTROL LOGIC

E-PLC-001 – PLC ARCHITECTURE

E-PLC-005 – E-PLC-007 – PLC I/O WIRING SCHEMATICS

E-CWS-051 – E-CWS-052 – MCP ELEVATIONS

## CONTROL LOGIC DEVICE DESCRIPTIONS

| RUNG | DESCRIPTION |
|---|---|
| E010 | VALVE CLOSED AUXILIARY RELAY: NORMALLY ENERGIZED WHEN THE VALVE IS 100% CLOSED. DE-ENERGIZED WHEN THE VALVE IS NOT 100% CLOSED. |
| E020 | VALVE CONTROL RELAY: NORMALLY DE-ENERGIZED. ENERGIZED WHEN THE PLC "OPEN" OUTPUT IS ENERGIZED AND THE PLC "CLOSE" OUTPUT IS DE-ENERGIZED AND THE DCSX RELAY IS ENERGIZED AND THE LOR IS ENERGIZED OR WHEN THE PUMP IS RUNNING AND THE VCR RELAY IS ENERGIZED AND THE PUMP SELECTOR SWITCH IS IN THE HAND POSITION AND THE PLC "CLOSE" OUTPUT IS DE-ENERGIZED AND THE LOR RELAY IS ENERGIZED. |

BAR LENGTH ON ORIGINAL DRAWING EQUALS ONE INCH. ADJUST SCALE ACCORDINGLY

STATE OF TEXAS — K. A. HARUTUNIAN — 5511 — REGISTERED PROFESSIONAL ENGINEER — 2/21/2005

HARUTUNIAN ENGINEERING INCORPORATED
ENGINEERING AND ENVIRONMENTAL CONSULTANTS
305 EAST HUNTLAND DRIVE SUITE 500
AUSTIN, TEXAS 78752

REUSE OF DOCUMENTS
This document and the ideas and designs incorporated herein as an instrument of professional service has been developed, designed and prepared by Harutunian Engineering, Inc. and is not to be used, in whole or part, for any other project without the written authorization of Water District No. 10 and Harutunian Engineering, Inc. © 2005

HEI
HEI
HEI
FEBRUARY 2005
NONE

TRAVIS COUNTY WATER CONTROL & IMPROVEMENT DISTRICT NO 10
PUMP STATION NO 1

CONTROL VALVE "CV-4" CONTROL SCHEMATIC

PROJECT 2002-210 | SHEET 94 | DWG NO. E-CWS-042

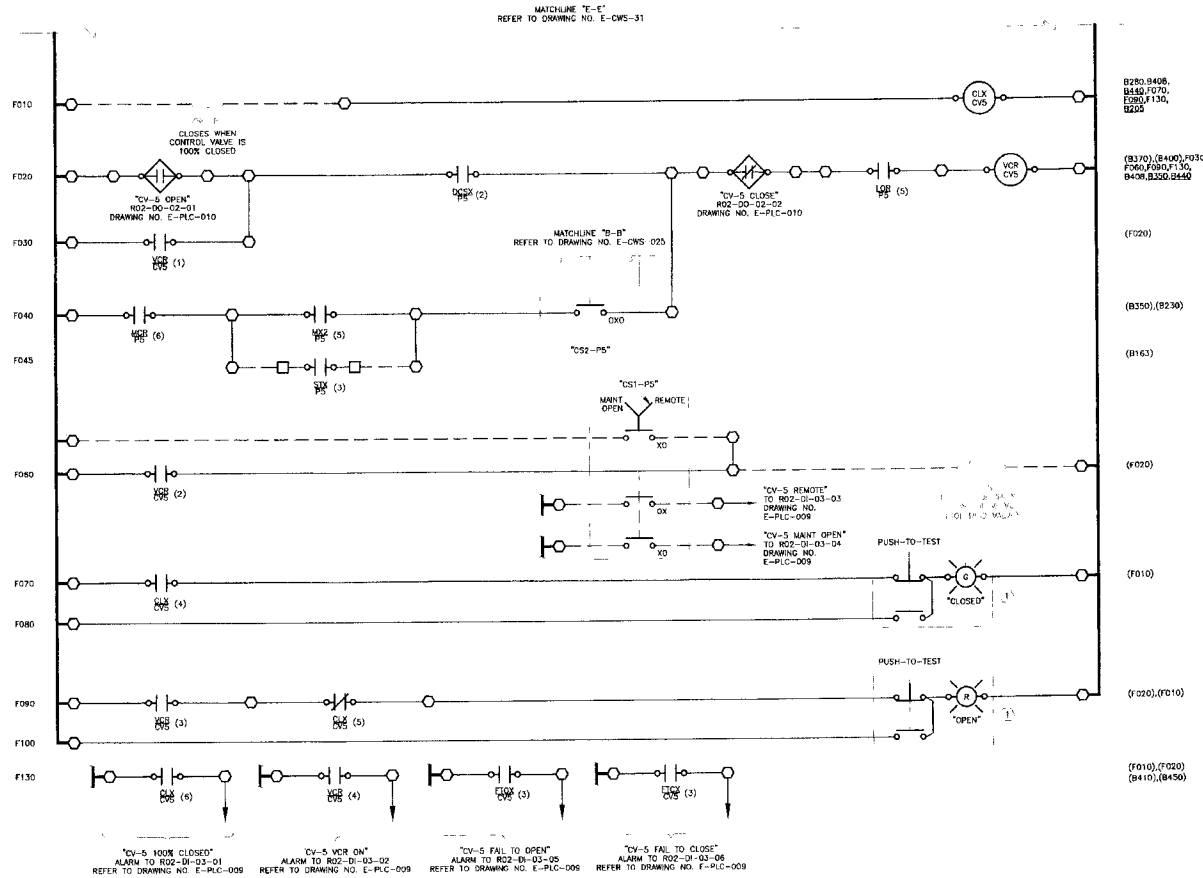


## WIRING AND TERMINAL DEVICE LEGEND.

— — INDICATES WIRING BETWEEN PANELS OR TO A FIELD MOUNTED DEVICE

o DEVICE WIRING TERMINAL

O PROPOSED TERMINAL BLOCK LOCATED IN PROPOSED MAIN CONTROL PANEL "MCP-001" ANY DEVICE SHOWN WITH DEVICE WIRING TERMINALS CONNECTED DIRECTLY TO THESE SYMBOLS WITH SOLID LINES IS ALSO LOCATED IN MAIN CONTROL PANEL "MCP-001"

## KEY NOTES:

(1) INDICATING PILOT LIGHT WITH INTEGRAL MOMENTARY ACTION "PUSH-TO-TEST" PUSHBUTTON REFER TO ELECTRICAL SPECIFICATIONS.

## GENERAL NOTES.

1 LIGHT LINEWORK DENOTES EXISTING EQUIPMENT DARK LINEWORK DENOTES PROPOSED EQUIPMENT

## REFERENCE DRAWINGS.

E-CWS-027 – E-CWS-031 – PUMP CONTROL LOGIC

E-PLC-001 – PLC ARCHITECTURE

E-PLC-008 – E-PLC-011 – PLC I/O WIRING SCHEMATICS

E-CWS-051 – E-CWS-052 – MCP ELEVATIONS

## CONTROL LOGIC DEVICE DESCRIPTIONS

| RUNG | DESCRIPTION |
|---|---|
| F010 | VALVE CLOSED AUXILIARY RELAY; NORMALLY ENERGIZED WHEN VALVE IS 100% CLOSED. DE-ENERGIZED WHEN THE VALVE IS NOT 100% CLOSED. |
| F020 | VALVE CONTROL RELAY; NORMALLY DE-ENERGIZED. ENERGIZED WHEN THE PLC "OPEN" OUTPUT IS ENERGIZED AND THE PLC "CLOSE" OUTPUT IS DE-ENERGIZED AND THE DCSX RELAY IS ENERGIZED AND THE LOR IS ENERGIZED OR WHEN THE PUMP IS RUNNING AND THE MCR RELAY IS ENERGIZED AND THE PUMP SELECTOR SWITCH IS IN THE HAND POSITION AND THE PLC "CLOSE" OUTPUT IS DE-ENERGIZED AND THE LOR RELAY IS ENERGIZED. |

BAR LENGTH ON ORIGINAL DRAWING FOR SCALE ONLY. MAY ADJUST NOW ACCURACY

2/21/2005

HARUTUNIAN ENGINEERING INCORPORATED

ENGINEERING AND ENVIRONMENTAL CONSULTANTS
305 EAST HUNTLAND DRIVE SUITE 500
AUSTIN, TEXAS 78752

REUSE OF DOCUMENTS
This document and the ideas and designs incorporated herein, as an instrument of professional service has been developed, designed and prepared by Harutunian Engineering, Inc. and is not to be used, in whole or part, for any other project without the written authorization of Water District No. 10 and Harutunian Engineering, Inc. © 2005

CHECKED HEI
DRAWN HEI
DATE FEBRUARY 2005
SCALE NONE

TRAVIS COUNTY WATER CONTROL & IMPROVEMENT DISTRICT NO. 10
PUMP STATION NO. 1

CONTROL VALVE "CV-5" CONTROL SCHEMATIC

JOB 2002-210 SHEET 95 DWG NO. E-CWS-044

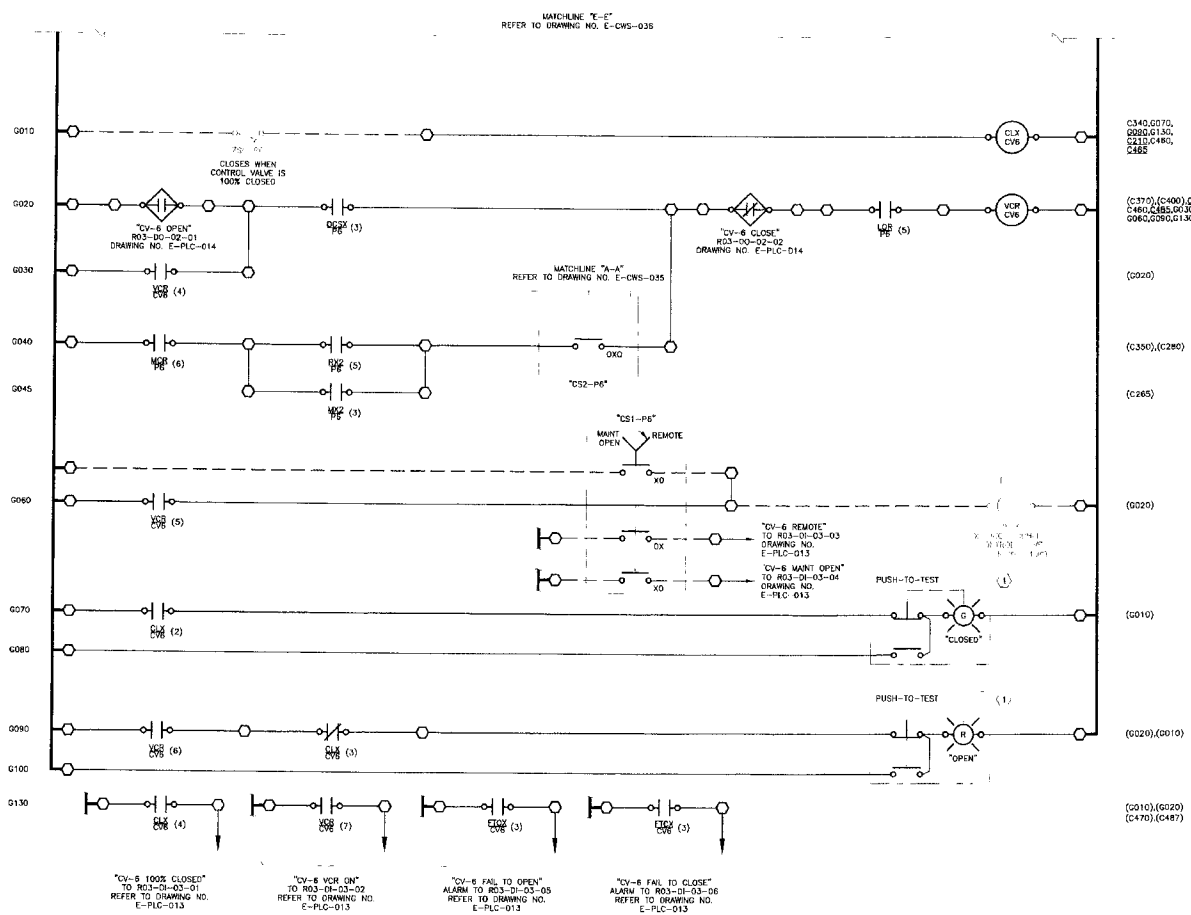


## WIRING AND TERMINAL DEVICE LEGEND.

- — — INDICATES WIRING BETWEEN PANELS OR TO A FIELD MOUNTED DEVICE.
- o DEVICE WIRING TERMINAL
- ⬡ PROPOSED TERMINAL BLOCK LOCATED IN PROPOSED MAIN CONTROL PANEL "MCP-001" ANY DEVICE SHOWN WITH DEVICE WIRING TERMINALS CONNECTED DIRECTLY TO THESE SYMBOLS WITH SOLID LINES IS ALSO LOCATED IN MAIN CONTROL PANEL "MCP-001"

## KEY NOTES:

(1) INDICATING PILOT LIGHT WITH INTEGRAL MOMENTARY ACTION "PUSH-TO-TEST" PUSHBUTTON. REFER TO ELECTRICAL SPECIFICATIONS.

## GENERAL NOTES:

1. LIGHT LINEWORK DENOTES EXISTING EQUIPMENT DARK LINEWORK DENOTES PROPOSED EQUIPMENT

## REFERENCE DRAWINGS.

E-CWS-032 – E-CWS-036 – PUMP CONTROL LOGIC

E-PLC-001 – PLC ARCHITECTURE

E-PLC-012 – E-PLC-014 – PLC I/O WIRING SCHEMATICS

E-CWS-051 – E-CWS-052 – MCP ELEVATIONS

## CONTROL LOGIC DEVICE DESCRIPTIONS

| RUNG | DESCRIPTION |
|---|---|
| G010 | VALVE CLOSED AUXILIARY RELAY: NORMALLY ENERGIZED WHEN THE VALVE IS 100% CLOSED. DE-ENERGIZED WHEN THE VALVE IS NOT 100% CLOSED. |
| G020 | VALVE CONTROL RELAY: NORMALLY DE-ENERGIZED. ENERGIZED WHEN THE PLC "OPEN" OUTPUT IS ENERGIZED AND THE PLC "CLOSE" OUTPUT IS DE-ENERGIZED AND THE DCSX RELAY IS ENERGIZED AND THE LOR IS ENERGIZED OR WHEN THE PUMP IS RUNNING AND THE VCR RELAY IS ENERGIZED AND THE PUMP SELECTOR SWITCH IS IN THE HAND POSITION AND THE PLC "CLOSE" OUTPUT IS DE-ENERGIZED AND THE LOR RELAY IS ENERGIZED. |

BAR LENGTH ON THIS DRAWING EQUALS ONE INCH AT FULL SCALE ACCORDINGLY

8/21/2005

HARUTUNIAN ENGINEERING INCORPORATED
ENGINEERING AND ENVIRONMENTAL CONSULTANTS
305 EAST HUNTLAND DRIVE SUITE 500
AUSTIN, TEXAS 78752

REUSE OF DOCUMENTS
This document and the ideas and designs incorporated herein as an instrument of professional service has been developed, designed and prepared by Harutunian Engineering, Inc. And is not to be used, in whole or part, for any other project without the written authorization of Water District No. 10 and Harutunian Engineering, Inc. © 2005

HEI
HEI
HEI
FEBRUARY 2005
NONE

TRAVIS COUNTY WATER CONTROL & IMPROVEMENT DISTRICT NO. 10
PUMP STATION NO. 1

CONTROL VALVE "CV-6" CONTROL SCHEMATIC

2002-210 | SHEET 96 | E-CWS-046

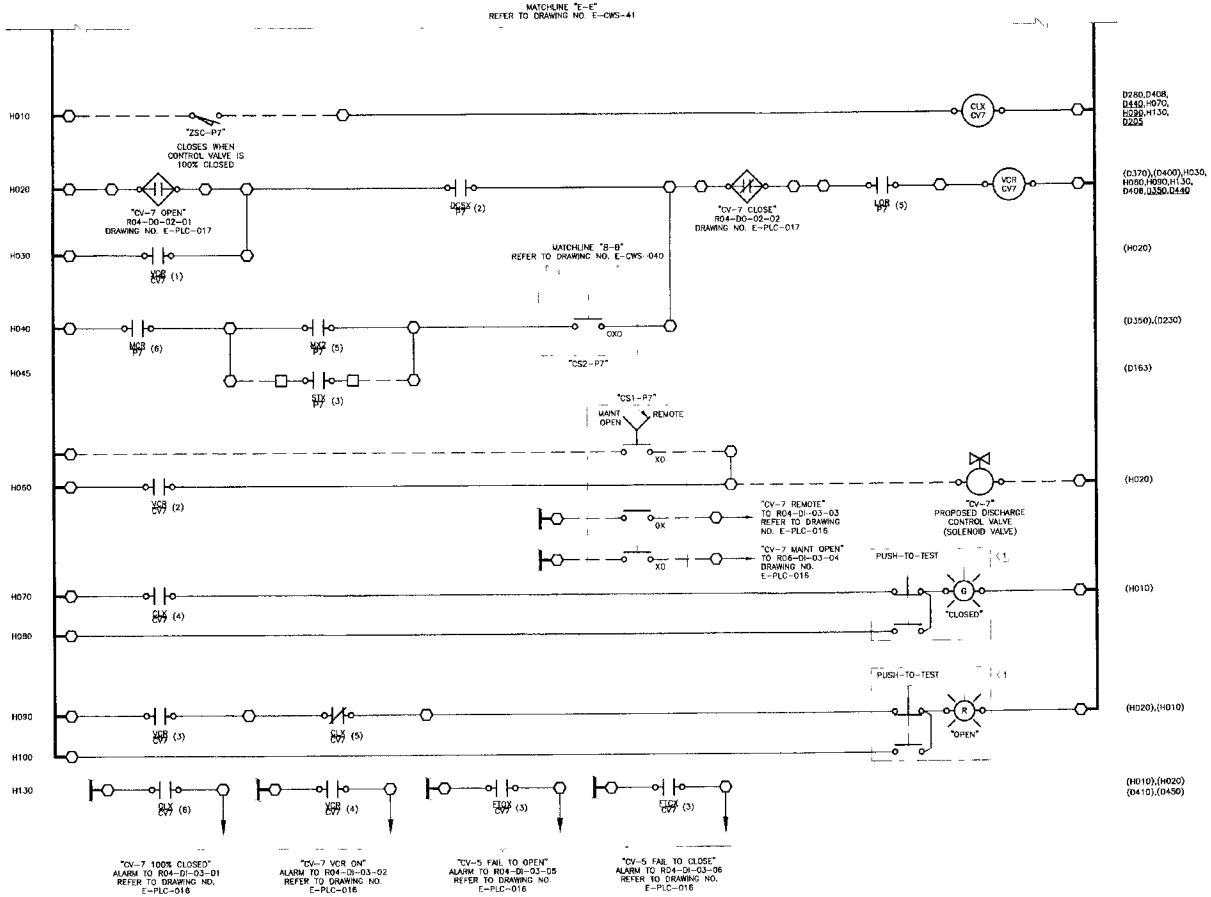


## WIRING AND TERMINAL DEVICE LEGEND:

— — INDICATES WIRING BETWEEN PANELS OR TO A FIELD MOUNTED DEVICE.

o DEVICE WIRING TERMINAL

O PROPOSED TERMINAL BLOCK LOCATED IN PROPOSED MAIN CONTROL PANEL "MCP-001" ANY DEVICE SHOWN WITH DEVICE WIRING TERMINALS CONNECTED DIRECTLY TO THESE SYMBOLS WITH SOLID LINES IS ALSO LOCATED IN MAIN CONTROL PANEL "MCP-001"

## KEY NOTES:

(1) INDICATING PILOT LIGHT WITH INTEGRAL MOMENTARY ACTION "PUSH-TO-TEST" PUSHBUTTON. REFER TO ELECTRICAL SPECIFICATIONS.

## REFERENCE DRAWINGS:

E-CWS-037 – E-CWS-041 – PUMP CONTROL LOGIC

E-PLC-001 – PLC ARCHITECTURE

E-PLC-015 – E-PLC-018 – PLC I/O WIRING SCHEMATICS

E-CWS-051 – E-CWS-052 – MCP ELEVATIONS

## CONTROL LOGIC DEVICE DESCRIPTIONS

| RUNG | DESCRIPTION |
|---|---|
| H010 | VALVE CLOSED AUXILIARY RELAY: NORMALLY ENERGIZED WHEN VALVE IS 100% CLOSED. DE-ENERGIZED WHEN THE VALVE IS NOT 100% CLOSED. |
| H020 | VALVE CONTROL RELAY: NORMALLY DE-ENERGIZED. ENERGIZED WHEN THE PLC "OPEN" OUTPUT IS ENERGIZED AND THE PLC "CLOSE" OUTPUT IS DE-ENERGIZED AND THE DCSX RELAY IS ENERGIZED AND THE LOR IS ENERGIZED OR WHEN THE PUMP IS RUNNING AND THE MCR RELAY IS ENERGIZED AND THE PUMP SELECTOR SWITCH IS IN THE HAND POSITION AND THE PLC "CLOSE" OUTPUT IS DE-ENERGIZED AND THE LOR RELAY IS ENERGIZED. |

ON LENGTH OF WIRING DRAWING EQUALS ONE INCH ATTACH SCALE ACCORDINGLY

STATE OF TEXAS A. CHRIS DE HARUTUNIAN 43 REGISTERED PROFESSIONAL ENGINEER 6/21/2005

HARUTUNIAN ENGINEERING INCORPORATED

ENGINEERING AND ENVIRONMENTAL CONSULTANTS
305 EAST HUNTLAND DRIVE SUITE 500
AUSTIN, TEXAS 78752

REUSE OF DOCUMENTS
This document and the ideas and designs incorporated herein, as an instrument of professional service has been developed, designed and prepared by Harutunian Engineering, Inc. and is not to be used, in whole or part, for any other project without the written authorization of Water District No. 10 and Harutunian Engineering, Inc. © 2005

DESIGNED HEI
DRAWN HEI
CHECKED HEI
DATE FEBRUARY 2005
SCALE NONE

TRAVIS COUNTY WATER CONTROL & IMPROVEMENT DISTRICT NO. 10
PUMP STATION NO. 1

CONTROL VALVE "CV-7" CONTROL SCHEMATIC

2002-210 | SHEET 97 | E-CWS-048

GENERAL NOTES:

1. THE CONTRACTOR SHALL SIZE ALL ENCLOSURES PER, AND IN ACCORDANCE WITH, THE REQUIREMENTS OF THE NATIONAL ELECTRIC CODE (N.E.C.)

REFERENCE DRAWINGS:

E-FP-004 – EQUIPMENT ARRANGEMENT PLAN

E-CWS-022 – E-CWS-041 – PUMP CONTROL LOGIC

E-SP-007 – PUMP AREA RENOVATION PLAN

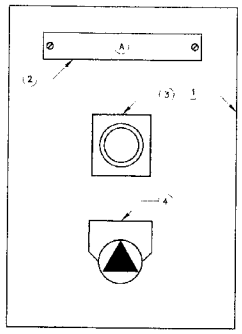


TYPICAL PUMP FIELD CONTROL STATION FRONT ELEVATION (1)

SCALE: NTS

NOTE: TYPICAL FOR PUMP FIELD CONTROL STATIONS "CS-P4" "CS-P5", "CS-P6" AND "CS-P7"

FIELD CONTROL STATION/PANEL EQUIPMENT SCHEDULE

| IDENTIF-ICATION MARK | DESCRIPTION | LEGEND PLATE INSCRIPTION | LETTER SIZE (MINIMUM) | OPERATOR OR LENS COLOR |
|---|---|---|---|---|
| 1 | CONTROL STATION ENCLOSURE PER SPECIFICATIONS. | NOT APPLICABLE | NOT APPLICABLE | NOT APPLICABLE |
| 2 | 3-PLY PHENOLIC NAMEPLATE PER SPECIFICATIONS. LETTER IN CIRCLE CORRESPONDS TO IDENTIFICATION MARK IN FIELD CONTROL STATION NAMEPLATE SCHEDULE ON THIS DRAWING. | NOT APPLICABLE | NOT APPLICABLE | NOT APPLICABLE |
| 3 | MUSHROOM HEAD TYPE EMERGENCY STOP PUSH BUTTON SWITCH WITH LEGEND PLATE PER SPECIFICATIONS. | E-STOP | 3/16" | RED |
| 4 | TWO POSITION SELECTOR SWITCH WITH LEGEND PLATE PER SPECIFICATIONS | VALVE OPEN-REMOTE | 3/16" | BLACK |

FIELD CONTROL STATION NAMEPLATE SCHEDULE

| IDENTIFICATION MARK | LINE NO. | LEGEND PLATE INSCRIPTION | LETTER SIZE (MINIMUM) |
|---|---|---|---|
| A | FIRST | "CS-X" WHERE X = P4 FOR P-4<br>X = P5 FOR P-5<br>X = P6 FOR P-6<br>X = P7 FOR P-7 | 3/8" |
| | SECOND | CONTROL STATION | 1/4" |

BAR ENGTH ON ORIGINAL DRAWING EQUAL ONE INCH ADJUST SCALE ACCORDINGLY

2/2/2005

HARUTUNIAN ENGINEERING INCORPORATED

ENGINEERING AND ENVIRONMENTAL CONSULTANTS
305 EAST HUNTLAND DRIVE SUITE 500
AUSTIN, TEXAS 78752

REUSE OF DOCUMENTS

This document and the ideas and designs incorporated herein as an instrument of professional service has been developed, designed and prepared by Harutunian Engineering, Inc. and is not to be used, in whole or part, for any other project without the written authorization of Water District No. 10 and Harutunian Engineering, Inc. © 2005

DESIGNED BY HEI
DRAWN BY HEI
CHECKED BY HEI
DATE FEBRUARY 2005
SCALE NONE

TRAVIS COUNTY WATER CONTROL & IMPROVEMENT DISTRICT NO 10
PUMP STATION NO 1

FIELD CONTROL STATION
FRONT ELEVATION AND DETAILS

PROJECT NO. 2002-210 | SHEET 98 | DWG. E-CWS-050

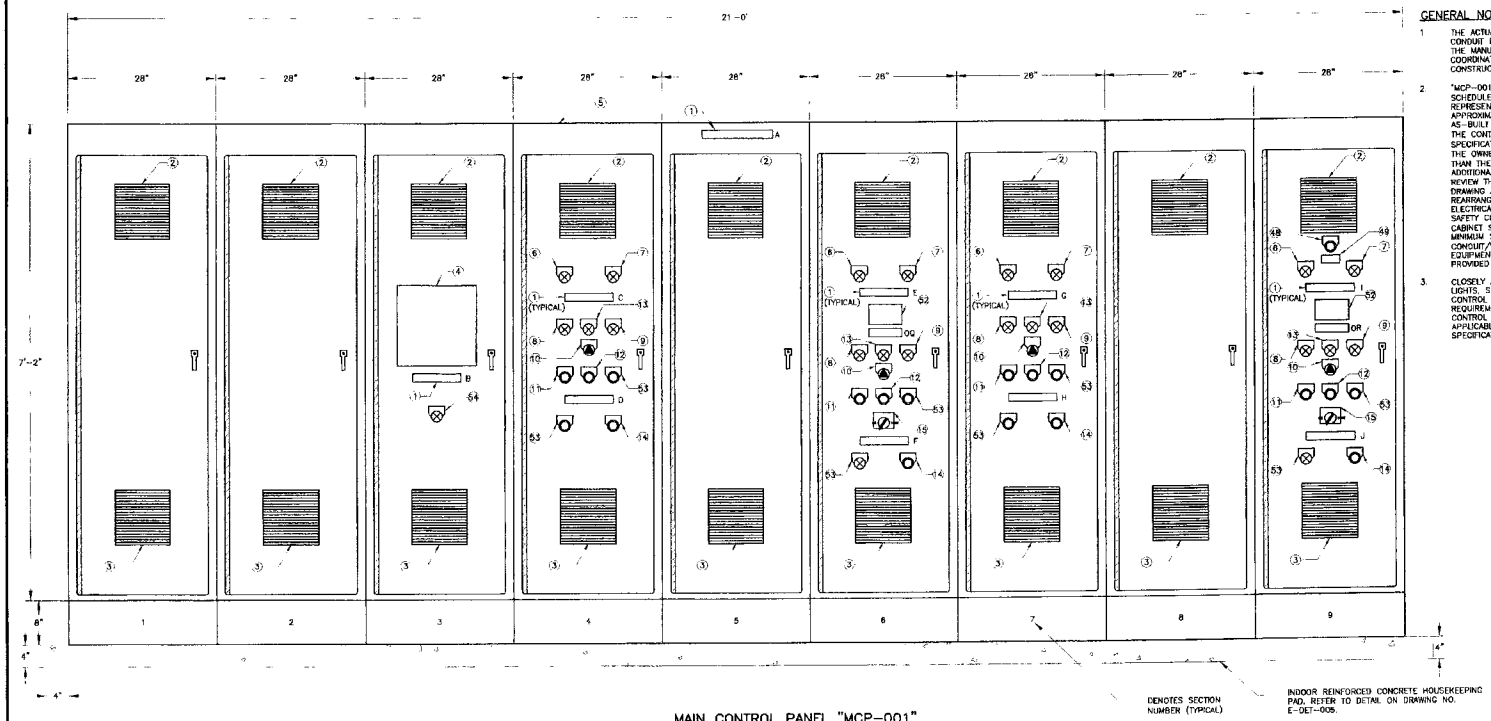


## MAIN CONTROL PANEL "MCP-001" EXTERIOR FRONT ELEVATION

SCALE: NTS

## GENERAL NOTES:

1. THE ACTUAL REQUIRED SIZE AND LOCATION OF THE CONDUIT ENTRANCE AREA IS TO BE DETERMINED BY THE MANUFACTURER. CLOSELY AND CAREFULLY COORDINATE THIS LOCATION PRIOR TO COMMENCING CONSTRUCTION.
2. "MCP-001" DIMENSIONS GIVEN ON THE EQUIPMENT SCHEDULE (21'-0"L X 2'-8"D X 7'-10"H) REPRESENT MINIMUM REQUIRED SIZE AND ARE APPROXIMATE. CONTRACTOR TO DETERMINE EXACT AS-BUILT SIZE REQUIRED FOR THE CABINET TO MEET THE CONTRACT DOCUMENTS (DRAWINGS AND SPECIFICATIONS) WITHOUT ANY ADDITIONAL COST TO THE OWNER (SHOULD THE FINAL SIZE BE LARGER THAN THE MINIMUM SIZE REQUIRED BY THIS DRAWING). ADDITIONALLY, THE CONTRACTOR IS TO CAREFULLY REVIEW THE ELECTRICAL/CONTROL FLOOR PLAN DRAWING AND MAKE ANY ADJUSTMENTS/EQUIPMENT REARRANGEMENTS NECESSARY TO MEET NATIONAL ELECTRICAL CODE REQUIREMENTS AND ANY OTHER SAFETY CODES ADOPTED BY OWNER SHOULD THE CABINET SIZE BE ANY GREATER/LARGER THAN THE MINIMUM SIZE REQUIRED BY THIS DRAWING. CONDUIT/WIRING, ETC. ADJUSTMENT CAUSED BY ANY EQUIPMENT REARRANGEMENT, ETC., SHALL ALSO BE PROVIDED AT NO ADDITIONAL COST TO THE OWNER.
3. CLOSELY AND CAREFULLY COORDINATE ALL PILOT LIGHTS, SELECTOR SWITCHES, PUSH BUTTONS, CONTROL RELAYS, TIMING RELAYS, ETC., REQUIREMENTS WITH THE APPLICABLE EQUIPMENT CONTROL SCHEMATICS. ALSO REFER TO THE APPLICABLE CONTROL SCHEMATICS AND SPECIFICATIONS FOR ADDITIONAL INFORMATION.

## REFERENCE DRAWINGS:

E-FP-004 – EQUIPMENT ARRANGEMENT PLAN
E-SP-007 – PUMP AREA SITE PLAN
E-CWS-022 – E-CWS-041 – PUMP CONTROL LOGIC
E-CWS-042 – E-CWS-049 – VALVE CONTROL LOGIC
E-PNLS-001 – PANEL SCHEDULES
E-PLC-001 – PLC ARCHITECTURE
E-CWS-052 – MCP INTERIOR ELEVATION
E-CWS-054 – E-CWS-056 – "MCP-001" NAMEPLATE SCHEDULE
E-CWS-053 – "MCP-001" EQUIPMENT SCHEDULE

STATE OF TEXAS REGISTERED PROFESSIONAL ENGINEER 2/21/2005

HARUTUNIAN ENGINEERING INCORPORATED
ENGINEERING AND ENVIRONMENTAL CONSULTANTS
305 EAST HUNTLAND DRIVE SUITE 500
AUSTIN, TEXAS 78752

REUSE OF DOCUMENTS
This document and the ideas and designs incorporated herein as an instrument of professional service has been developed, designed and prepared by Harutunian Engineering, Inc. and is not to be used, in whole or part, for any other project without the written authorization of Water District No. 10 and Harutunian Engineering, Inc. © 2005

HEI
HEI
HEI
FEBRUARY 2005
NONE

TRAVIS COUNTY WATER CONTROL & IMPROVEMENT DISTRICT NO. 10
PUMP STATION NO. 1

MAIN CONTROL PANEL "MCP-001"
FRONT ELEVATION

2002-210 | SHEET 99 | E-CWS-051

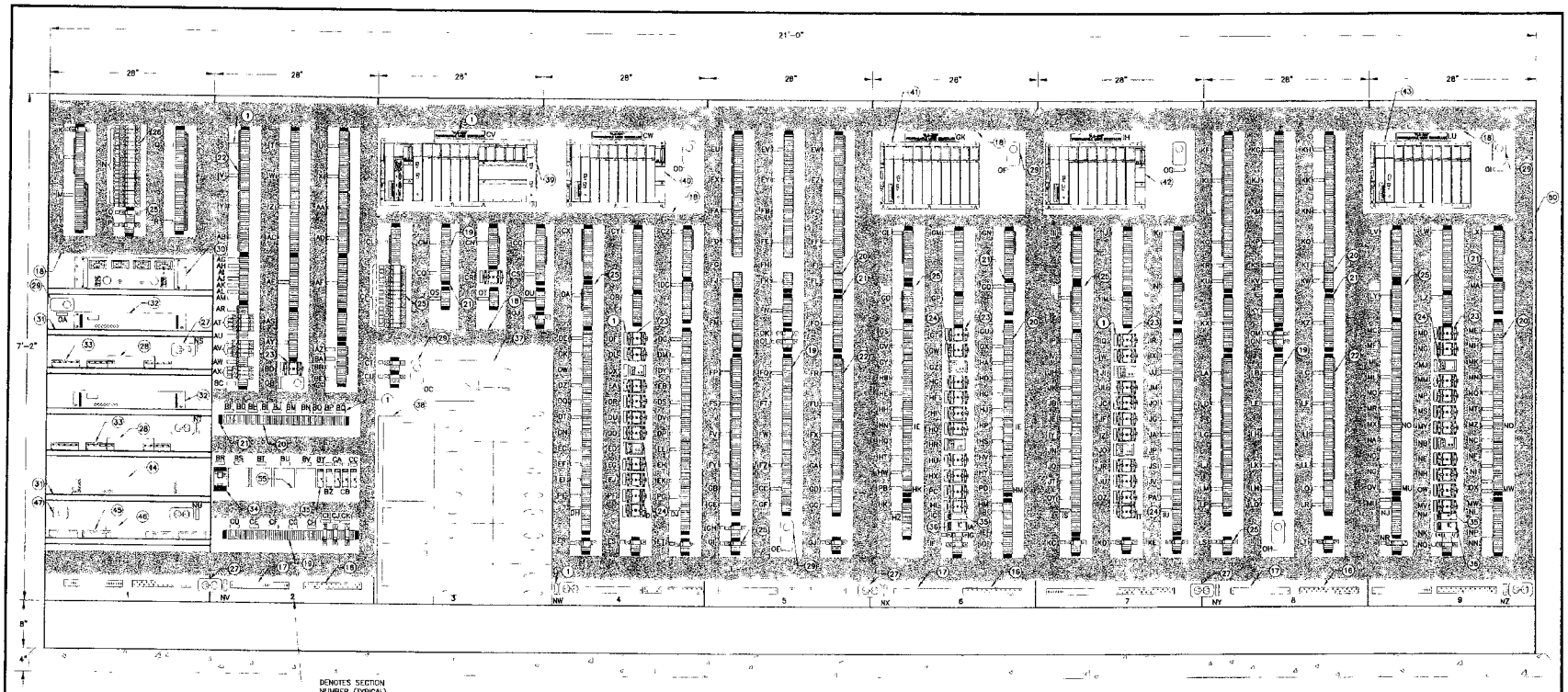


## MAIN CONTROL PANEL "MCP-001" INTERIOR FRONT ELEVATION

SCALE: NTS

### GENERAL NOTES.

1. THE ACTUAL REQUIRED SIZE AND LOCATION OF THE CONDUIT ENTRANCE AREA IS TO BE DETERMINED BY THE MANUFACTURER. CLOSELY AND CAREFULLY COORDINATE THIS LOCATION PRIOR TO COMMENCING CONSTRUCTION.

2. "MCP-001" DIMENSIONS GIVEN ON THE EQUIPMENT SCHEDULE (21'-0"L X 2'-8"D X 7'-10"H) REPRESENT MINIMUM REQUIRED SIZE AND ARE APPROXIMATE. CONTRACTOR TO DETERMINE EXACT AS-BUILT SIZE REQUIRED FOR THE CABINET TO MEET THE CONTRACT DOCUMENTS (DRAWINGS AND SPECIFICATIONS) WITHOUT ANY ADDITIONAL COST TO THE OWNER (SHOULD THE FINAL SIZE BE LARGER THAN THE MINIMUM SIZE REQUIRED BY THIS DRAWING). ADDITIONALLY, THE CONTRACTOR IS TO CAREFULLY REVIEW THE ELECTRICAL/CONTROL FLOOR PLAN DRAWING AND MAKE ANY ADJUSTMENTS/EQUIPMENT REARRANGEMENTS NECESSARY TO MEET NATIONAL ELECTRICAL CODE REQUIREMENTS AND ANY OTHER SAFETY CODES ADOPTED BY THE CITY OF AUSTIN. SHOULD THE CABINET SIZE BE ANY GREATER/LARGER THAN THE MINIMUM SIZE REQUIRED BY THIS DRAWING, CONDUIT/WIRING, ETC. ADJUSTMENT CAUSED BY ANY EQUIPMENT REARRANGEMENT, ETC. SHALL ALSO BE PROVIDED AT NO ADDITIONAL COST TO THE OWNER.

3. CLOSELY AND CAREFULLY COORDINATE ALL PILOT LIGHTS, SELECTOR SWITCHES, PUSH BUTTONS, CONTROL RELAYS, TIMING RELAYS, ETC., REQUIREMENTS WITH THE APPLICABLE EQUIPMENT CONTROL SCHEMATICS. ALSO REFER TO THE APPLICABLE CONTROL SCHEMATICS FOR ADDITIONAL INFORMATION.

### GENERAL NOTES. (CONTINUED)

4. PLEASE NOTE THAT THE EQUIPMENT IS IDENTIFIED ON THIS DRAWING AS TYPICAL FOR THE ENTIRE DRAWING. NUMBER IN CIRCLE CORRESPONDS TO IDENTIFICATION MARK IN CONTROL PANEL EQUIPMENT SCHEDULE ON DRAWING E-CWS-053.

5. THIS DRAWING IS INTENDED AS AN OVERALL CONCEPTUAL LAYOUT OF THE INTERIOR OF THE MAIN CONTROL PANEL AND REPRESENTS THE OVERALL LAYOUT PATTERN OF MAJOR DEVICES AND TERMINATION OF DEVICES IN RELATION TO THE PROPOSED PROCESS/MECHANICAL SYSTEM. DO NOT INFER EXACT COMPONENT QUANTITIES AND LOCATIONS FROM THIS DRAWING. THIS DRAWING IS NOT INCLUSIVE OF ALL REQUIREMENTS AND DOES NOT DEPICT ALL COMPONENTS OR REQUIREMENTS OF THE MAIN CONTROL PANEL. ALSO REFER TO THE WIRING SCHEMATICS DRAWINGS AND TO THE SPECIFICATIONS FOR ADDITIONAL INFORMATION AND REQUIREMENTS

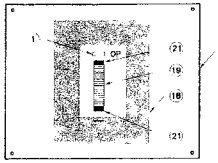

## SIDE PANEL ELEVATION

SCALE: NTS

### REFERENCE DRAWINGS.

E-FP-004 – EQUIPMENT ARRANGEMENT PLAN
E-SP-007 – PUMP AREA PLAN
E-CWS-022 – E-CWS-041 – PUMP CONTROL LOGIC
E-CWS-042 – E-CWS-049 – VALVE CONTROL LOGIC
E-PNLS-001 – PANEL SCHEDULES
E-PLC-001 – PLC ARCHITECTURE
E-PLC-002 – E-PLC-018 – PLC I/O WIRING SCHEMATICS
E-CWS-051 – MCP FRONT ELEVATION
E-CWS-054 – E-CWS-056 – "MCP-001" NAMEPLATE SCHEDULE
E-CWS-057 – E-CWS-061 – WIRING SCHEMATICS
E-CWS-053 – "MCP-001" EQUIPMENT SCHEDULE
E-IWS-009 – E-IWS-018 – INSTRUMENT WIRING SCHEMATICS

3.
BHE FUNCTION ORIGINAL DRAWING SCALE ONE INCH AT FULL SIZE ACCORDINGLY

2/21/2005

HARUTUNIAN ENGINEERING INCORPORATED
ENGINEERING AND ENVIRONMENTAL CONSULTANTS
305 EAST HUNTLAND DRIVE SUITE 500
AUSTIN, TEXAS 78752

REUSE OF DOCUMENTS
This document and the ideas and designs incorporated herein as an instrument of professional service has been developed, designed and prepared by Harutunian Engineering, Inc. and is not to be used, in whole or part, for any other project without the written authorization of Water District No. 10 and Harutunian Engineering, Inc. © 2005

DESIGNED BY HEI
DRAWN BY HEI
CHECKED BY HEI
DATE FEBRUARY 2005
SCALE NONE

TRAVIS COUNTY WATER CONTROL & IMPROVEMENT DISTRICT NO. 10
PUMP STATION NO 1

MAIN CONTROL PANEL "MCP-001"
INTERIOR ELEVATION

PROJECT NO 2002-210 | SHEET 100 | DWG E-CWS-052

## EQUIPMENT SCHEDULE
## MAIN INSTRUMENT/CONTROL PANEL "MCP-001" (1)

| IDENTIFICATION MARK | DESCRIPTION | LEGEND PLATE DESCRIPTION | LETTER SIZE (MINIMUM) | OPERATOR OR LENS COLOR |
|---|---|---|---|---|
| 1 | 3-PLY, BLACK-WHITE-BLACK PHENOLIC NAMEPLATE. ADJACENT LETTER CORRESPONDS TO IDENTIFICATION MARK IN CONTROL PANEL NAMEPLATE SCHEDULE ON DRAWINGS E-CWS-054 – E-CWS-056. | N/A | N/A | N/A |
| 2 | 10" HIGH X 9" WIDE UPPER FAN AND VENTILATION PLATE FINISHED TO MATCH PANEL. | N/A | N/A | N/A |
| 3 | 10" HIGH X 9" WIDE VENTILATION LOWER PLATE FINISHED TO MATCH PANEL. | N/A | N/A | N/A |
| 4 | OPERATOR INTERFACE UNIT (OIU) | N/A | N/A | N/A |
| 5 | 21'-0" WIDE X 2'-8" DEEP X 7-10" TALL, NEMA 12, GASKETED, FREE STANDING CABINET CONSTRUCTED OF NINE (9), INDIVIDUAL, 28" WIDE SECTIONS EACH WITH A SOLID BASE AND TWO (2) LIFTING EYES. REFER TO SPECIFICATIONS. | N/A | N/A | N/A |
| 6 | NEMA 4, 30 MILLIMETERS, PUSH-TO-TEST TRANSFORMER TYPE LIGHT EMITTING DIODE (LED) INDICATOR LIGHT WITH LEGEND PLATE. | OPEN | 3/16" | RED |
| 7 | NEMA 4, 30 MILLIMETERS, PUSH-TO-TEST TRANSFORMER TYPE LIGHT EMITTING DIODE (LED) INDICATOR LIGHT WITH LEGEND PLATE. | CLOSED | 3/16" | GREEN |
| 8 | NEMA 4, 30 MILLIMETERS, PUSH-TO-TEST TRANSFORMER TYPE LIGHT EMITTING DIODE (LED) INDICATOR LIGHT WITH LEGEND PLATE. | ON | 3/16" | RED |
| 9 | NEMA 4, 30 MILLIMETERS, PUSH-TO-TEST TRANSFORMER TYPE LIGHT EMITTING DIODE (LED) INDICATOR LIGHT WITH LEGEND PLATE. | OFF | 3/16" | GREEN |
| 10 | NEMA 4, 30 MILLIMETERS, 3-POSITION SELECTOR SWITCH WITH LEGEND PLATE. CONTACT BLOCKS SHALL BE 10 AMP RATED, MINIMUM, AT 120VAC. | OFF-HAND-DCS | 3/16" | BLACK |
| 11 | NEMA 4, 30 MILLIMETERS, MOMENTARY PUSHBUTTON SWITCH WITH LEGEND PLATE. CONTACT BLOCKS SHALL BE 10 AMP RATED, MINIMUM, AT 120VAC. | START | 3/16" | RED |
| 12 | NEMA 4, 30 MILLIMETERS, MOMENTARY PUSHBUTTON SWITCH WITH LEGEND PLATE. CONTACT BLOCKS SHALL BE 10 AMP RATED, MINIMUM, AT 120VAC. | STOP | 3/16" | GREEN |
| 13 | NEMA 4, 30 MILLIMETERS, PUSH-TO-TEST TRANSFORMER TYPE LIGHT EMITTING DIODE (LED) INDICATOR LIGHT WITH LEGEND PLATE. | ALARM | 3/16" | AMBER |
| 14 | NEMA 4, 30 MILLIMETERS, MOMENTARY PUSHBUTTON SWITCH WITH LEGEND PLATE. CONTACT BLOCKS SHALL BE 10 AMP RATED, MINIMUM, AT 120VAC. | RESET | 3/16" | RED |
| 15 | NEMA 4, 30 MILLIMETERS, MANUAL SPEED POTENTIOMETER WITH LEGEND PLATE. | 0%-100% | 3/16" | BLACK |
| 16 | GROUND BUS BAR | N/A | N/A | N/A |
| 17 | ISOLATED GROUND BUS BAR | N/A | N/A | N/A |
| 18 | SLOTTED WALL WIRING DUCT | N/A | N/A | N/A |
| 19 | TERMINAL BLOCKS | N/A | N/A | N/A |
| 20 | TERMINAL BLOCKS (END BARRIER) | N/A | N/A | N/A |
| 21 | TERMINAL BLOCKS (END ANCHOR) | N/A | N/A | N/A |
| 22 | TERMINAL BLOCK JUMPERS | N/A | N/A | N/A |
| 23 | CONTROL RELAY | N/A | N/A | N/A |
| 24 | TIMING RELAY | N/A | N/A | N/A |
| 25 | CIRCUIT BREAKERS RATED 120VAC | N/A | N/A | N/A |
| 26 | CIRCUIT BREAKERS RATED 24VDC | N/A | N/A | N/A |

## EQUIPMENT SCHEDULE
## MAIN INSTRUMENT/CONTROL PANEL "MCP-001" (1)

| IDENTIFICATION MARK | DESCRIPTION | LEGEND PLATE DESCRIPTION | LETTER SIZE (MINIMUM) | OPERATOR OR LENS COLOR |
|---|---|---|---|---|
| 27 | 120VAC DUPLEX RECEPTACLE | N/A | N/A | N/A |
| 28 | POWER CENTER OUTLETS | N/A | N/A | N/A |
| 29 | FAN THERMOSTAT | N/A | N/A | N/A |
| 30 | 24VDC POWER SUPPLY | N/A | N/A | N/A |
| 31 | SLIDE-OUT SHELF | N/A | N/A | N/A |
| 32 | BRIDGE MUX | N/A | N/A | N/A |
| 33 | RS485 TO RS232 CONVERTER | N/A | N/A | N/A |
| 34 | PROCESS INDICATING TRANSMITTER CONTROLLER | N/A | N/A | N/A |
| 35 | SINGLE INPUT, SINGLE OUTPUT I/I ISOLATOR | N/A | N/A | N/A |
| 36 | POTENTIOMETER TRANSMITTER | N/A | N/A | N/A |
| 37 | UNINTERRUPTIBLE POWER SUPPLY (UPS) | N/A | N/A | N/A |
| 38 | UPS MAINTENANCE BYPASS CABINET | N/A | N/A | N/A |
| 39 | PLC RACK "PLC-R00"<br><br>CONTAINS:<br>1 16-SLOT RACK<br>1 POWER SUPPLY MODULE<br>1 CONTROL PROCESS UNIT<br>1 ETHERNET NETWORK INTERFACE MODULE<br>1 RIO HEAD<br>1 MODBUS PLUS NETWORK OPTION MODULE (DUAL CHANNEL)<br>2 ANALOG INPUT MODULES<br>4 DISCRETE INPUT MODULES<br>5 QUANTUM EMPTY MODULE WITH DOOR<br>6 40 POINT I/O TERMINAL STRIP | N/A | N/A | N/A |
| 40 | PLC RACK "PLC-R01"<br><br>CONTAINS:<br>1 10-SLOT RACK<br>1 POWER SUPPLY MODULE<br>1 RIO DROP<br>1 ANALOG INPUT MODULE<br>4 DISCRETE INPUT MODULES<br>2 DISCRETE OUTPUT MODULES<br>1 QUANTUM EMPTY MODULE WITH DOOR<br>7 40 POINT I/O TERMINAL STRIP | N/A | N/A | N/A |
| 41 | PLC RACK "PLC-R02"<br><br>CONTAINS:<br>1 10-SLOT RACK<br>1 POWER SUPPLY MODULE<br>1 RIO DROP<br>1 ANALOG INPUT MODULE<br>1 ANALOG OUTPUT MODULE<br>4 DISCRETE INPUT MODULES<br>2 DISCRETE OUTPUT MODULES<br>8 40 POINT I/O TERMINAL STRIP | N/A | N/A | N/A |
| 42 | PLC RACK "PLC-R03"<br><br>CONTAINS:<br>1 10-SLOT RACK<br>1 POWER SUPPLY MODULE<br>1 RIO DROP<br>1 ANALOG INPUT MODULE<br>4 DISCRETE INPUT MODULES<br>2 DISCRETE OUTPUT MODULES<br>1 QUANTUM EMPTY MODULE WITH DOOR<br>7 40 POINT I/O TERMINAL STRIP | N/A | N/A | N/A |

## EQUIPMENT SCHEDULE
## MAIN INSTRUMENT/CONTROL PANEL "MCP-001" (1)

| IDENTIFICATION MARK | DESCRIPTION | LEGEND PLATE DESCRIPTION | LETTER SIZE (MINIMUM) | OPERATOR OR LENS COLOR |
|---|---|---|---|---|
| 43 | PLC RACK "PLC-R04"<br><br>CONTAINS:<br>1 10-SLOT RACK<br>1 POWER SUPPLY MODULE<br>1 RIO DROP<br>1 ANALOG INPUT MODULE<br>1 ANALOG OUTPUT MODULE<br>4 DISCRETE INPUT MODULES<br>2 DISCRETE OUTPUT MODULES<br>8 40 POINT I/O TERMINAL STRIP | N/A | N/A | N/A |
| 44 | FUTURE BRIDGE MUX | N/A | N/A | N/A |
| 45 | FUTURE MODEM | N/A | N/A | N/A |
| 46 | FUTURE POWER CENTER OUTLETS | N/A | N/A | N/A |
| 48 | BREAK GLASS PUSH BUTTON. REFER TO KEYNOTE 3 ON DRAWING NO. E-CWS-020 FOR ADDITIONAL INFORMATION. | PUMP STATION EMERGENCY SHUTDOWN | 3/16" | N/A |
| 49 | "TO OPERATE BREAK GLASS" LEGEND PLATE FURNISHED WITH ITEM 48. | N/A | N/A | N/A |
| 50 | 28" X 28" (NOMINAL) SIDE MOUNTED SUB-PANEL WITH WHITE FINISH. | N/A | N/A | N/A |
| 51 | OMITTED | N/A | N/A | N/A |
| 52 | DIGITAL SPEED INDICATING TRANSMITTER | N/A | N/A | N/A |
| 53 | MUSHROOM HEAD TYPE EMERGENCY STOP PUSH BUTTON SWITCH WITH LEGEND PLATE PER SPECIFICATIONS | E-STOP | 3/16" | RED |
| 54 | NEMA 4, 30 MILLIMETERS, PUSH-TO-TEST TRANSFORMER TYPE LIGHT EMITTING DIODE (LED) INDICATOR LIGHT WITH LEGEND PLATE. | PLC TROUBLE | 3/16" | AMBER |
| 55 | SINGLE INPUT, DUAL OUTPUT I/I ISOLATOR | N/A | N/A | N/A |

REFERENCE DRAWINGS:

E-PLC-001 – PLC ARCHITECTURE

E-CWS-051 – MCP FRONT ELEVATION

E-CWS-052 – MCP INTERIOR ELEVATION

E-CWS-054 – E-CWS-056 – "MCP-001" NAMEPLATE SCHEDULE

KEY NOTES:

1) REFER TO CONTRACT SPECIFICATIONS FOR ADDITIONAL EQUIPMENT REQUIREMENTS.

BAR IS 1" ON ORIGINAL DRAWING. IF NOT 1" ADJUST SCALE ACCORDINGLY

STATE OF TEXAS — REGISTERED PROFESSIONAL ENGINEER — 2/21/2005

HARUTUNIAN ENGINEERING INCORPORATED

ENGINEERING AND ENVIRONMENTAL CONSULTANTS
305 EAST HUNTLAND DRIVE SUITE 360
AUSTIN, TEXAS 78752

REUSE OF DOCUMENTS

This document and the ideas and designs incorporated herein as an instrument of professional service has been developed, designed and prepared by Harutunian Engineering, Inc. and is not to be used, in whole or part, for any other project without the written authorization of Water District No. 10 and Harutunian Engineering, Inc. © 2005

DESIGNED BY HEI
DRAWN BY HEI
CHECKED BY HEI
DATE FEBRUARY 2005
SCALE NONE

TRAVIS COUNTY WATER CONTROL & IMPROVEMENT DISTRICT NO. 10
PUMP STATION NO. 1

MAIN CONTROL PANEL "MCP-001"
EQUIPMENT SCHEDULE

HEI PROJECT NO. 2002-210 | SHEET 101 | DWG E-CWS-053

## NAMEPLATE SCHEDULE
## MAIN INSTRUMENT/CONTROL PANEL
## "MCP-001"

| IDENTIFICATION MARK | LINE NO. | LEGEND PLATE DESCRIPTION | LETTER SIZE (MINIMUM) |
|---|---|---|---|
| A | FIRST | "MCP-001" | 1/2" |
| | SECOND | MAIN CONTROL PANEL | 3/8" |
| B | FIRST | "OIU-001" | 3/8" |
| | SECOND | OPERATOR INTERFACE UNIT | 3/8" |
| C | FIRST | "CV-4" | 3/8" |
| | SECOND | CONTROL VALVE NO. 4 | 3/8" |
| D | FIRST | "P-4" | 3/8" |
| | SECOND | PUMP NO. 4 | 3/8" |
| E | FIRST | "CV-5" | 3/8" |
| | SECOND | CONTROL VALVE NO. 5 | 3/8" |
| F | FIRST | "P-5" | 3/8" |
| | SECOND | PUMP NO. 5 | 3/8" |
| G | FIRST | "CV-6" | 3/8" |
| | SECOND | CONTROL VALVE NO. 6 | 3/8" |
| H | FIRST | "P-6" | 3/8" |
| | SECOND | PUMP NO. 6 | 3/8" |
| I | FIRST | "CV-7" | 3/8" |
| | SECOND | CONTROL VALVE NO. 7 | 3/8" |
| J | FIRST | "P-7" | 3/8" |
| | SECOND | PUMP NO. 7 | 3/8" |
| K | FIRST | "CB-24VPS1" | 1/8" |
| L | FIRST | "TB1-24VDC-HOT" | 1/4" |
| M | FIRST | "TB1-24VDC-POWER" | 1/4" |
| N | FIRST | "CB-PIT1" | 1/8" |
| | FIRST | "CB-VITP4" | 1/8" |
| | FIRST | "CB-VITP5" | 1/8" |
| | FIRST | "CB-VITP6" | 1/8" |
| | FIRST | "CB-VITP7" | 1/8" |
| | FIRST | "CB-ZTP5" | 1/8" |
| | FIRST | "CB-ZTP7" | 1/8" |
| | FIRST | "CB-FIT1" | 1/8" |
| | FIRST | "CB-PIT2" | 1/8" |
| | FIRST | "CB-PIT3" | 1/8" |
| | FIRST | "CB-TIT1" | 1/8" |
| | FIRST | "CB-TIT2" | 1/8" |
| | FIRST | "CB-UPS-RELAY" | 1/8" |
| | FIRST | "CB-OIU1 | 1/8" |
| | FIRST | "CB-SITP5" | 1/8" |
| | FIRST | "CB-SITP7" | 1/8" |
| | FIRST | "CB-RO2-AO1" | 1/8" |
| | FIRST | "CB-RO4-AO1" | 1/8" |
| | FIRST | "CB-SPARE" | 1/8" |
| | FIRST | "CB-SPARE" | 1/8" |
| O | FIRST | "CB-FAN1" | 1/8" |
| P | FIRST | "CB-LGT1" | 1/8" |
| Q | FIRST | "TB1-24VDC-POWER" | 1/4" |
| R | FIRST | "TB1-24VDC-SPARE" | 1/4" |
| S | FIRST | "TB1-RO0-DIO1" | 1/4" |
| T | FIRST | "TB2-RO0-DIO1" | 1/4" |
| U | FIRST | "TB3-RO0-DIO1" | 1/4" |

## NAMEPLATE SCHEDULE
## MAIN INSTRUMENT/CONTROL PANEL
## "MCP-001"

| IDENTIFICATION MARK | LINE NO. | LEGEND PLATE DESCRIPTION | LETTER SIZE (MINIMUM) |
|---|---|---|---|
| V | FIRST | "TB1-RO0-DIO2" | 1/4" |
| W | FIRST | "TB2-RO0-DIO2" | 1/4" |
| X | FIRST | "TB3-RO0-DIO2" | 1/4" |
| Y | FIRST | "TB1-RO0-DIO3" | 1/4" |
| Z | FIRST | "TB2-RO0-DIO3" | 1/4" |
| AA | FIRST | "TB3-RO0-DIO3" | 1/4 |
| AB | FIRST | "TB1-RO0-DIO4" | 1/4" |
| AC | FIRST | "TB2-RO0-DIO4" | 1/4" |
| AD | FIRST | "TB3-RO0-DIO4" | 1/4" |
| AE | FIRST | "TB1-RO0-AI01" | 1/4" |
| AF | FIRST | "TB1-RO0-AI02" | 1/4" |
| AG | FIRST | "PMU-SWB01A-RS485" | 1/4" |
| AH | FIRST | "PMU-SWB01B-RS485" | 1/4" |
| AI | FIRST | "MMR-P4-RS485" | 1/4" |
| AJ | FIRST | "MMR-P5-RS485" | 1/4" |
| AK | FIRST | "MMR-P6-RS485" | 1/4" |
| AL | FIRST | "MMR-P7-RS485" | 1/4" |
| AM | FIRST | "TB-RS485-SPARE" | 1/4" |
| AN | FIRST | OMITTED | 1/4" |
| AO | FIRST | OMITTED | 1/4" |
| AP | FIRST | OMITTED | 1/4" |
| AQ | FIRST | OMITTED | 1/4" |
| AR | FIRST | "TB1-120V-INST1" | 1/4" |
| AS | FIRST | "TB2-FLD-INST" | 1/4" |
| AT | FIRST | "CB-VITCP4" | 1/8" |
| | FIRST | "CB-VITCP5" | 1/8" |
| | FIRST | "CB-SITP5" | 1/8" |
| | FIRST | "CB-SPARE" | 1/8" |
| AU | FIRST | "TB1-120V-INST2" | 1/4" |
| AV | FIRST | "CB-VITCP6" | 1/8" |
| | FIRST | "CB-VITCP7" | 1/8" |
| | FIRST | "CB-SITP7" | 1/8" |
| | FIRST | "CB-SPARE" | 1/8" |
| AW | FIRST | "TB1-120V-INST3" | 1/4" |
| AX | FIRST | "CB-PITC1" | 1/8" |
| | FIRST | "CB-FIT1" | 1/8" |
| | FIRST | "CB-FI1" | 1/8" |
| AY | FIRST | "TB2-GND-INST" | 1/4" |
| AZ | FIRST | "TB3-NT-INST1" | 1/4" |
| BA | FIRST | "TB3-NT-INST2" | 1/4" |
| BB | FIRST | "TB3-NT-INST3" | 1/4" |
| BC | FIRST | "TB1-PLX1-PIT1" | 1/4" |
| BD | FIRST | "RELAY-PLX1-PIT1" | 1/4" |
| BE | FIRST | "TB3-PLX1-PIT1" | 1/4" |
| BF | FIRST | "TB1-PITC1-AI" | 1/4" |
| BG | FIRST | "TB1-VITCP4-AI" | 1/4" |
| BH | FIRST | "TB1-VITCP5-AI" | 1/4" |
| BI | FIRST | "TB1-VITCP6-AI" | 1/4" |
| BJ | FIRST | "TB1-VITCP7-AI" | 1/4" |
| BK | FIRST | OMITTED | 1/4" |

## NAMEPLATE SCHEDULE
## MAIN INSTRUMENT/CONTROL PANEL
## "MCP-001"

| IDENTIFICATION MARK | LINE NO. | LEGEND PLATE DESCRIPTION | LETTER SIZE (MINIMUM) |
|---|---|---|---|
| BL | FIRST | OMITTED | 1/4" |
| BM | FIRST | "TB1-FIT1" | 1/4" |
| BN | FIRST | "TB1-PIT2" | 1/4" |
| BO | FIRST | "TB1-PIT3" | 1/4" |
| BP | FIRST | "TB1-TIT1" | 1/4" |
| BQ | FIRST | "TB1 TIT2" | 1/4" |
| BR | FIRST | "PITC-001" | 1/4" |
| BS | FIRST | "I/I-VIT4" | 1/4" |
| BT | FIRST | "I/I-VIT5" | 1/4" |
| BU | FIRST | "I/I-VIT6" | 1/4" |
| BV | FIRST | "I/I-VIT7" | 1/4" |
| BW | FIRST | OMITTED | 1/4" |
| BX | FIRST | OMITTED | 1/4" |
| BY | FIRST | "I/I-FIT1" | 1/4" |
| BZ | FIRST | "I/I-PIT2" | 1/4" |
| CA | FIRST | "I/I-PIT3" | 1/4" |
| CB | FIRST | "I/I-TIT1" | 1/4" |
| CC | FIRST | "I/I-TIT2" | 1/4 |
| CD | FIRST | "TB1-PITC1-DO" | 1/4" |
| CE | FIRST | "TB1-VITCP4-DO" | 1/4" |
| CF | FIRST | "TB1-VITCP5-DO" | 1/4" |
| CG | FIRST | "TB1-VITCP6-DO" | 1/4" |
| CH | FIRST | "TB1-VITCP7-DO" | 1/4" |
| CI | FIRST | "CB-RECPT1" | 1/8" |
| CJ | FIRST | "CB-LGT2" | 1/8" |
| CK | FIRST | "CB-FAN2" | 1/8" |
| CL | FIRST | "TB1-120V-UPS" | 1/4" |
| CM | FIRST | "TB2-FLD-UPS" | 1/4" |
| CN | FIRST | "TB3-NT-UPS" | 1/4" |
| CO | FIRST | "TB4-GND-UPS" | 1/4" |
| CP | FIRST | "CB-PSR00" | 1/8" |
| | FIRST | "CB-PSR01" | 1/8" |
| | FIRST | "CB-PSR02" | 1/8" |
| | FIRST | "CB-PSR03" | 1/8" |
| | FIRST | "CB-PSR04" | 1/8" |
| | FIRST | "CB-24VPS2" | 1/8" |
| | FIRST | "CB-CP1 | 1/8" |
| | FIRST | "CB-INST1" | 1/8" |
| | FIRST | "CB-INST2" | 1/8" |
| | FIRST | "CB-INST3" | 1/8" |
| | FIRST | "CB-PWRC1" | 1/8" |
| | FIRST | "CB-PWRC2" | 1/8" |
| | FIRST | "CB-PWRC3" | 1/8" |
| | FIRST | "CB-SPARE" | 1/8" |
| | FIRST | "CB-SPARE" | 1/8" |
| | FIRST | "CB-RO0-UI/O" | 1/8" |
| CQ | FIRST | "TB2-PSFY-UPS1" | 1/4" |
| CR | FIRST | "RELAY-PSFY-UPS1" | 1/4" |
| CS | FIRST | "TB4-PSFY-UPS1" | 1/4" |
| CT | FIRST | "CB-FAN3 | 1/8" |
| CU | FIRST | "CB-LGT3" | 1/8" |

REFERENCE DRAWINGS:

- E-CWS-051 – MCP FRONT ELEVATION
- E-CWS-052 – MCP INTERIOR ELEVATION
- E-CWS-053 – "MCP-001" EQUIPMENT SCHEDULE
- E-CWS-057 – E-CWS-061 – WIRING SCHEMATICS

BAR LENGTH ON ORIGINAL DRAWING EQUALS ONE INCH. AREAS SCALE ACCORDINGLY

2/2/2005

HARUTUNIAN ENGINEERING INCORPORATED
ENGINEERING AND ENVIRONMENTAL CONSULTANTS
305 EAST HUNTLAND DRIVE SUITE 500
AUSTIN, TEXAS 78752

REUSE OF DOCUMENTS
This document and the ideas and designs incorporated herein as an instrument of professional service has been developed, designed and prepared by Harutunian Engineering, Inc. and is not to be used, in whole or part, for any other project without the written authorization of Water District No. 10 and Harutunian Engineering, Inc. © 2005

HEI
HEI
HEI
FEBRUARY 2005
NONE

TRAVIS COUNTY WATER CONTROL & IMPROVEMENT DISTRICT NO 10
PUMP STATION NO 1

MAIN CONTROL PANEL "MCP-001"
NAMEPLATE SCHEDULE
(SHEET 1 OF 3)

2002-210 | SHEET 102 | E-CWS-054

## NAMEPLATE SCHEDULE
## MAIN INSTRUMENT/CONTROL PANEL
## "MCP-001"

| IDENTIFICATION MARK | LINE NO. | LEGEND PLATE DESCRIPTION | LETTER SIZE (MINIMUM) |
|---|---|---|---|
| CV | FIRST | "PLC-R00" | 1/4" |
| | SECOND | PROGRAMMABLE LOGIC CONTROLLER | 1/4" |
| CW | FIRST | "PLC-R01" | 1/4" |
| | SECOND | PROGRAMMABLE LOGIC CONTROLLER | 1/4" |
| CX | FIRST | "TB1-120V-P4" | 1/4" |
| CY | FIRST | "TB2-FLD-P4" | 1/4" |
| CZ | FIRST | "TB3-NT-P4" | 1/4" |
| DA | FIRST | "TB1-120V-CV4" | 1/4" |
| DB | FIRST | "TB2-FLD-CV4" | 1/4" |
| DC | FIRST | "TB3-NT-CV4" | 1/4" |
| DD | FIRST | OMITTED | 1/8" |
| DE | FIRST | "TB1-MX2-P4" | 1/4" |
| DF | FIRST | "RELAY-MX2-P4" | 1/4" |
| DG | FIRST | "TB3-MX2-P4" | 1/4" |
| DH | FIRST | "TB1-RX2-P4" | 1/4" |
| DI | FIRST | "RELAY-RX2-P4" | 1/4" |
| DJ | FIRST | "TB3-RX2-P4" | 1/4" |
| DK | FIRST | "TB1-MCR-P4" | 1/4" |
| DL | FIRST | "RELAY-MCR-P4" | 1/4" |
| DM | FIRST | "TB3-MCR-P4" | 1/4" |
| DN | FIRST | "TB1-FTCX-P4" | 1/4" |
| DO | FIRST | "RELAY-FTCX-P4" | 1/4" |
| DP | FIRST | "TB3-FTCX-P4" | 1/4" |
| DQ | FIRST | "TB1-LOR-P4" | 1/4" |
| DR | FIRST | "RELAY-LOR-P4" | 1/4" |
| DS | FIRST | "TB3-LOR-P4" | 1/4" |
| DT | FIRST | "TB1-RSX2-P4" | 1/4" |
| DU | FIRST | "RELAY-RSX2-P4" | 1/4" |
| DV | FIRST | "TB3-RSX2-P4" | 1/4" |
| DW | FIRST | "TB1-FTO-P4" | 1/4" |
| DX | FIRST | "RELAY-FTO-P4" | 1/4" |
| DY | FIRST | "TB3-FTO-P4" | 1/4" |
| DZ | FIRST | "TB1-FTOX-P4" | 1/4" |
| EA | FIRST | "RELAY-FTOX-P4" | 1/4" |
| EB | FIRST | "TB3-FTOX-P4" | 1/4" |
| EC | FIRST | "TB1-FTC-P4" | 1/4" |
| ED | FIRST | "RELAY-FTC-P4" | 1/4" |
| EE | FIRST | "TB3-FTC-P4" | 1/4" |
| EF | FIRST | "TB1-CLX-CV4" | 1/4" |
| EG | FIRST | "RELAY-CLX-CV4" | 1/4" |
| EH | FIRST | "TB3-CLX-CV4" | 1/4" |
| EI | FIRST | "TB1-VCR-CV4" | 1/4" |
| EJ | FIRST | "RELAY-VCR-CV4" | 1/4" |
| EK | FIRST | "TB3-VCR-CV4" | 1/4" |
| EL | FIRST | OMITTED | 1/4" |
| EM | FIRST | OMITTED | 1/4" |
| EN | FIRST | OMITTED | 1/4" |
| EO | FIRST | OMITTED | 1/4" |
| EP | FIRST | OMITTED | 1/4" |
| EQ | FIRST | OMITTED | 1/4" |

## NAMEPLATE SCHEDULE
## MAIN INSTRUMENT/CONTROL PANEL
## "MCP-001"

| IDENTIFICATION MARK | LINE NO. | LEGEND PLATE DESCRIPTION | LETTER SIZE (MINIMUM) |
|---|---|---|---|
| ER | FIRST | "CB-RECPT2" | 1/8" |
| ES | FIRST | "CB-FAN4" | 1/8" |
| ET | FIRST | "CB-LGT4" | 1/8" |
| EU | FIRST | "TB1-R01-DI01" | 1/4" |
| EV | FIRST | "TB2-R01-DI01" | 1/4" |
| EW | FIRST | "TB3-R01-DI01" | 1/4" |
| EX | FIRST | "TB1-R01-DI02" | 1/4" |
| EY | FIRST | "TB2-R01-DI02" | 1/4" |
| EZ | FIRST | "TB3-R01-DI02" | 1/4" |
| FA | FIRST | "TB1-R01-DI03" | 1/4" |
| FB | FIRST | "TB2-R01-DI03" | 1/4" |
| FC | FIRST | "TB3-R01-DI03" | 1/4" |
| FD | FIRST | "TB1-R01-DI04" | 1/4" |
| FE | FIRST | "TB2-R01-DI04" | 1/4" |
| FF | FIRST | "TB3-R01-DI04" | 1/4" |
| FG | FIRST | "TB1-R01-DO01" | 1/4" |
| FH | FIRST | "TB2-R01-DO01" | 1/4" |
| FI | FIRST | "TB3-R01-DO01" | 1/4" |
| FJ | FIRST | "TB1-R01-DO02" | 1/4" |
| FK | FIRST | "TB2-R01-DO02" | 1/4" |
| FL | FIRST | "TB3-R01-DO02" | 1/4" |
| FM | FIRST | "TB1-R01-AI01" | 1/4" |
| FN | FIRST | "TB1-R02-AO01" | 1/4" |
| FO | FIRST | "TB1-R02-AI01" | 1/4" |
| FP | FIRST | "TB1-R02-DI01" | 1/4" |
| FQ | FIRST | "TB2-R02-DI01" | 1/4" |
| FR | FIRST | "TB3-R02-DI01" | 1/4" |
| FS | FIRST | "TB1-R02-DI02" | 1/4" |
| FT | FIRST | "TB2-R02-DI02" | 1/4" |
| FU | FIRST | "TB3-R02-DI02" | 1/4" |
| FV | FIRST | "TB1-R02-DI03" | 1/4" |
| FW | FIRST | "TB2-R02-DI03" | 1/4" |
| FX | FIRST | "TB3-R02-DI03" | 1/4" |
| FY | FIRST | "TB1-R02-DI04" | 1/4" |
| FZ | FIRST | "TB2-R02-DI04" | 1/4" |
| GA | FIRST | "TB3-R02-DI04" | 1/4" |
| GB | FIRST | "TB1-R02-DO01" | 1/4" |
| GC | FIRST | "TB2-R02-DO01" | 1/4" |
| GD | FIRST | "TB3-R02-DO01" | 1/4 |
| GE | FIRST | "TB1-R02-DO02" | 1/4" |
| GF | FIRST | "TB2-R02-DO02" | 1/4" |
| GG | FIRST | "TB3-R02-DO02" | 1/4 |
| GH | FIRST | "CB-FAN5" | 1/8" |
| GI | FIRST | "CB-LGT5" | 1/8" |
| GJ | FIRST | "CB-RECPT3" | 1/8" |
| GK | FIRST | "PLC-R02" | 1/4" |
| | SECOND | PROGRAMMABLE LOGIC CONTROLLER | 1/4" |
| GL | FIRST | "TB1-120V-P5" | 1/4" |
| GM | FIRST | "TB2-FLD-P5" | 1/4" |
| GN | FIRST | "TB3-NT-P5" | 1/4" |

## NAMEPLATE SCHEDULE
## MAIN INSTRUMENT/CONTROL PANEL
## "MCP-001"

| IDENTIFICATION MARK | LINE NO. | LEGEND PLATE DESCRIPTION | LETTER SIZE (MINIMUM) |
|---|---|---|---|
| GO | FIRST | "TB1-120V-CV5" | 1/4" |
| GP | FIRST | "TB2-FLD-CV5" | 1/4" |
| GQ | FIRST | "TB3-NT-CV5" | 1/4" |
| GR | FIRST | OMITTED | 1/8" |
| GS | FIRST | "TB1-MX2-P5" | 1/4" |
| GT | FIRST | "RELAY-MX2-P5" | 1/4" |
| GU | FIRST | "TB3-MX2-P5" | 1/4" |
| GV | FIRST | "TB1-MCR-P5" | 1/4" |
| GW | FIRST | "RELAY-MCR-P5" | 1/4" |
| GX | FIRST | "TB3-MCR-P5 | 1/4" |
| GY | FIRST | "TB1-FTO-P5" | 1/4" |
| GZ | FIRST | "RELAY-FTO-P5" | 1/4" |
| HA | FIRST | "TB3-FTO-P5" | 1/4" |
| HB | FIRST | "TB1-FTOX-P5" | 1/4" |
| HC | FIRST | "RELAY-FTOX-P5" | 1/4" |
| HD | FIRST | "TB3-FTOX-P5" | 1/4" |
| HE | FIRST | "TB1-LOR-P5" | 1/4" |
| HF | FIRST | "RELAY-LOR-P5" | 1/4" |
| HG | FIRST | "TB3-LOR-P5" | 1/4" |
| HH | FIRST | "TB1-RSX2-P5" | 1/4" |
| HI | FIRST | "RELAY-RSX2-P5" | 1/4" |
| HJ | FIRST | "TB3-RSX2-P5" | 1/4" |
| HK | FIRST | "TB1-SCR-P5" | 1/4" |
| HL | FIRST | "RELAY-SCR-P5" | 1/4" |
| HM | FIRST | "TB3-SCR-P5" | 1/4" |
| HN | FIRST | "TB1-FTCX-P5" | 1/4" |
| HO | FIRST | "RELAY-FTCX-P5" | 1/4" |
| HP | FIRST | "TB3-FTCX-P5 | 1/4" |
| HQ | FIRST | "TB1-FTC-P5" | 1/4" |
| HR | FIRST | "RELAY-FTC-P5" | 1/4" |
| HS | FIRST | "TB3-FTC-P5" | 1/4" |
| HT | FIRST | "TB1-CLX-CV5" | 1/4" |
| HU | FIRST | "RELAY-CLX-CV5" | 1/4" |
| HV | FIRST | "TB3-CLX-CV5" | 1/4" |
| HW | FIRST | "TB1-VCR-CV5" | 1/4" |
| HX | FIRST | "RELAY-VCR-CV5" | 1/4" |
| HY | FIRST | "TB3-VCR-CV5" | 1/4" |
| HZ | FIRST | "TB1-ZT-P5" | 1/4" |
| IA | FIRST | "TB1-ZTP5" | 1/4" |
| IB | FIRST | "TB3-ZT-P5" | 1/4" |
| IC | FIRST | "ZT-P5" | 1/4" |
| ID | FIRST | "TB-SITP5-AI" | 1/4" |
| IE | FIRST | "TB-SITP5-DO" | 1/4" |
| IF | FIRST | "CB-FAN6" | 1/8" |
| IG | FIRST | "CB-LGT6" | 1/8" |
| IH | FIRST | "PLC-R03" | 1/4" |
| | SECOND | PROGRAMMABLE LOGIC CONTROLLER | 1/4" |
| II | FIRST | "TB1-120V-P6" | 1/4" |
| IJ | FIRST | "TB2-FLD-P6" | 1/4" |
| IK | FIRST | "TB3-NT-P6" | 1/4" |

REFERENCE DRAWINGS.

E-CWS-051 – MCP FRONT ELEVATION

E-CWS-052 – MCP INTERIOR ELEVATION

E-CWS-053 – "MCP-001" EQUIPMENT SCHEDULE

E-CWS-057 – E-CWS-061 – WIRING SCHEMATICS

REV. FOR ORIG. DRAWING LOCAL OFF. INCH. ALTER. SCALE & ORD. ICI

STATE OF TEXAS — REGISTERED PROFESSIONAL ENGINEER — 2/21/2005

HARUTUNIAN ENGINEERING INCORPORATED

ENGINEERING AND ENVIRONMENTAL CONSULTANTS
309 EAST HUNTLAND DRIVE SUITE 500
AUSTIN, TEXAS 78752

REUSE OF DOCUMENTS

This document and the ideas and designs incorporated herein as an instrument of professional service has been developed, designed and prepared by Harutunian Engineering, Inc. and is not to be used, in whole or part, for any other project without the written authorization of Water District No. 10 and Harutunian Engineering, Inc. © 2005

DATE HEI 02-22-05 07 HEI 02-25-05 07 HEI 02-28-05 07

FEBRUARY 2005

SCALE NONE

TRAVIS COUNTY WATER CONTROL & IMPROVEMENT DISTRICT NO 10
PUMP STATION NO 1

MAIN CONTROL PANEL "MCP-001"
NAMEPLATE SCHEDULE
(SHEET 2 OF 3)

JOB 2002-210 | SHEET 103 | DWG E-CWS-055

## NAMEPLATE SCHEDULE
## MAIN INSTRUMENT/CONTROL PANEL
## "MCP-001"

| IDENTIFICATION MARK | LINE NO. | LEGEND PLATE DESCRIPTION | LETTER SIZE (MINIMUM) |
|---|---|---|---|
| IL | FIRST | "TB1-120V-CV6" | 1/4" |
| IM | FIRST | "TB2-FLD-CV6" | 1/4" |
| IN | FIRST | "TB3-NT-CV6" | 1/4" |
| IO | FIRST | OMITTED | 1/8" |
| IP | FIRST | "TB1-MX2-P6" | 1/4" |
| IQ | FIRST | "RELAY-MX2-P6" | 1/4" |
| IR | FIRST | "TB3-MX2-P6" | 1/4" |
| IS | FIRST | "TB1-RX2-P6" | 1/4" |
| IT | FIRST | "RELAY-RX2-P6" | 1/4" |
| IU | FIRST | "TB3-RX2-P6" | 1/4" |
| IV | FIRST | "TB1-MCR-P6" | 1/4" |
| IW | FIRST | "RELAY-MCR-P6" | 1/4" |
| IX | FIRST | "TB3-MCR-P6" | 1/4" |
| IY | FIRST | "TB1-FTCX-P6" | 1/4" |
| IZ | FIRST | "RELAY-FTCX-P6" | 1/4" |
| JA | FIRST | "TB3-FTCX-P6" | 1/4" |
| JB | FIRST | "TB1-LOR-P6" | 1/4" |
| JC | FIRST | "RELAY-LOR-P6" | 1/4" |
| JD | FIRST | "TB3-LOR-P6" | 1/4" |
| JE | FIRST | "TB1-RSX2-P6" | 1/4" |
| JF | FIRST | "RELAY-RSX2-P6" | 1/4" |
| JG | FIRST | "TB3-RSX2-P6" | 1/4" |
| JH | FIRST | "TB1-FTO-P6" | 1/4" |
| JI | FIRST | "RELAY-FTO-P6" | 1/4" |
| JJ | FIRST | "TB3-FTO-P6" | 1/4" |
| JK | FIRST | "TB1-FTOX-P6" | 1/4" |
| JL | FIRST | "RELAY-FTOX-P6" | 1/4" |
| JM | FIRST | "TB3-FTOX-P6" | 1/4" |
| JN | FIRST | "TB1-FTC-P6" | 1/4" |
| JO | FIRST | "RELAY-FTC-P6" | 1/4" |
| JP | FIRST | "TB3-FTC-P6" | 1/4" |
| JQ | FIRST | "TB1-CLX-CV6" | 1/4" |
| JR | FIRST | "RELAY-CLX-CV6" | 1/4" |
| JS | FIRST | "TB3-CLX-CV6" | 1/4" |
| JT | FIRST | "TB1-VCR-CV6" | 1/4" |
| JU | FIRST | "RELAY-VCR-CV6" | 1/4" |
| JV | FIRST | "TB3-VCR-CV6" | 1/4" |
| JW | FIRST | OMITTED | 1/4" |
| JX | FIRST | OMITTED | 1/4" |
| JY | FIRST | OMITTED | 1/4" |
| JZ | FIRST | OMITTED | 1/4" |
| KA | FIRST | OMITTED | 1/4" |
| KB | FIRST | OMITTED | 1/4" |
| KC | FIRST | "CB-FAN7" | 1/8" |
| KD | FIRST | "CB-LGT7" | 1/8" |
| KE | FIRST | "CB-RECPT4" | 1/8" |
| KF | FIRST | "TB1-R03-DI01" | 1/4" |
| KG | FIRST | "TB2-R03-DI01" | 1/4" |
| KH | FIRST | "TB3-R03-DI01" | 1/4" |
| KI | FIRST | "TB1-R03-DI02" | 1/4" |

## NAMEPLATE SCHEDULE
## MAIN INSTRUMENT/CONTROL PANEL
## "MCP-001"

| IDENTIFICATION MARK | LINE NO. | LEGEND PLATE DESCRIPTION | LETTER SIZE (MINIMUM) |
|---|---|---|---|
| KJ | FIRST | "TB2-R03-DI02" | 1/4" |
| KK | FIRST | "TB3-R03-DI02" | 1/4" |
| KL | FIRST | "TB1-R03-DI03" | 1/4" |
| KM | FIRST | "TB2-R03-DI03" | 1/4" |
| KN | FIRST | "TB3-R03-DI03" | 1/4" |
| KO | FIRST | "TB1-R03-DI04" | 1/4" |
| KP | FIRST | "TB2-R03-DI04" | 1/4" |
| KQ | FIRST | "TB3-R03-DI04" | 1/4" |
| KR | FIRST | "TB1-R03-DO01" | 1/4" |
| KS | FIRST | "TB2-R03-DO01" | 1/4" |
| KT | FIRST | "TB3-R03-DO01" | 1/4" |
| KU | FIRST | "TB1-R03-DO02" | 1/4" |
| KV | FIRST | "TB2-R03-DO02" | 1/4" |
| KW | FIRST | "TB3-R03-DO02" | 1/4" |
| KX | FIRST | "TB1-R03-AI01" | 1/4" |
| KY | FIRST | "TB1-R04-AO01" | 1/4" |
| KZ | FIRST | "TB1-R04-AI01" | 1/4" |
| LA | FIRST | "TB1-R04-DI01" | 1/4" |
| LB | FIRST | "TB2-R04-DI01" | 1/4" |
| LC | FIRST | "TB3-R04-DI01" | 1/4" |
| LD | FIRST | "TB1-R04-DI02" | 1/4" |
| LE | FIRST | "TB2-R04-DI02" | 1/4" |
| LF | FIRST | "TB3-R04-DI02" | 1/4" |
| LG | FIRST | "TB1-R04-DI03" | 1/4" |
| LH | FIRST | "TB2-R04-DI03" | 1/4" |
| LI | FIRST | "TB3-R04-DI03" | 1/4" |
| LJ | FIRST | "TB1-R04-DI04" | 1/4" |
| LK | FIRST | "TB2-R04-DI04" | 1/4" |
| LL | FIRST | "TB3-R04-DI04" | 1/4" |
| LM | FIRST | "TB1-R04-DO01" | 1/4" |
| LN | FIRST | "TB2-R04-DO01" | 1/4" |
| LO | FIRST | "TB3-R04-DO01" | 1/4" |
| LP | FIRST | "TB1-R04-DO02" | 1/4" |
| LQ | FIRST | "TB2-R04-DO02" | 1/4" |
| LR | FIRST | "TB3-R04-DO02" | 1/4" |
| LS | FIRST | "CB-FAN8" | 1/8" |
| LT | FIRST | "CB-LGT8" | 1/8" |
| LU | FIRST | "PLC-R04" | 1/4" |
| | SECOND | PROGRAMMABLE LOGIC CONTROLLER | 1/4" |
| LV | FIRST | "TB1-120V-P7" | 1/4" |
| LW | FIRST | "TB2-FLD-P7" | 1/4" |
| LX | FIRST | "TB3-NT-P7" | 1/4" |
| LY | FIRST | "TB1 120V-CV7" | 1/4" |
| LZ | FIRST | "TB2-FLD-CV7" | 1/4" |
| MA | FIRST | "TB3-NT-CV7" | 1/4" |
| MB | FIRST | OMITTED | 1/8 |
| MC | FIRST | "TB1-MX2-P7" | 1/4 |
| MD | FIRST | "RELAY-MX2-P7" | 1/4" |
| ME | FIRST | "TB3-MX2-P7" | 1/4" |
| MF | FIRST | "TB1-MCR-P7" | 1/4" |

## NAMEPLATE SCHEDULE
## MAIN INSTRUMENT/CONTROL PANEL
## "MCP-001"

| IDENTIFICATION MARK | LINE NO. | LEGEND PLATE DESCRIPTION | LETTER SIZE (MINIMUM) |
|---|---|---|---|
| MG | FIRST | "RELAY-MCR-P7" | 1/4" |
| MH | FIRST | "TB3-MCR-P7" | 1/4" |
| MI | FIRST | "TB1-FTO-P7" | 1/4" |
| MJ | FIRST | "RELAY-FTO-P7" | 1/4" |
| MK | FIRST | "TB3-FTO-P7" | 1/4" |
| ML | FIRST | "TB1-FTOX-P7" | 1/4" |
| MM | FIRST | "RELAY-FTOX-P7" | 1/4" |
| MN | FIRST | "TB3-FTOX-P7" | 1/4" |
| MO | FIRST | "TB1-LOR-P7" | 1/4" |
| MP | FIRST | "RELAY-LOR-P7" | 1/4" |
| MQ | FIRST | "TB3-LOR-P7" | 1/4" |
| MR | FIRST | "TB1-RSX2-P7" | 1/4" |
| MS | FIRST | "RELAY-RSX2-P7" | 1/4" |
| MT | FIRST | "TB3-RSX2-P7" | 1/4" |
| MU | FIRST | "TB1-SCR-P7" | 1/4" |
| MV | FIRST | "RELAY-SCR-P7" | 1/4" |
| MW | FIRST | "TB3-SCR-P7" | 1/4" |
| MX | FIRST | "TB1-FTCX-P7" | 1/4" |
| MY | FIRST | "RELAY-FTCX-P7" | 1/4" |
| MZ | FIRST | "TB3-FTCX-P7" | 1/4" |
| NA | FIRST | "TB1-FTC-P7" | 1/4" |
| NB | FIRST | "RELAY-FTC-P7" | 1/4" |
| NC | FIRST | "TB3-FTC-P7" | 1/4" |
| ND | FIRST | "TB1-CLX-CV7" | 1/4" |
| NE | FIRST | "RELAY-CLX-CV7" | 1/4" |
| NF | FIRST | "TB3-CLX-CV7" | 1/4" |
| NG | FIRST | "TB1-VCR-CV7" | 1/4" |
| NH | FIRST | "RELAY-VCR-CV7" | 1/4" |
| NI | FIRST | "TB3-VCR-CV7" | 1/4" |
| NJ | FIRST | "TB1-ZT-P7" | 1/4" |
| NK | FIRST | "1/1-ZTP7" | 1/4" |
| NL | FIRST | "TB3-ZT-P7" | 1/4" |
| NM | FIRST | "ZT-P7" | 1/4" |
| NN | FIRST | "TB-SITP7-AI" | 1/4" |
| NO | FIRST | "TB-SITP7-DO" | 1/4" |
| NP | FIRST | "CB-FAN9" | 1/8" |
| NQ | FIRST | "CB-LGT9" | 1/8" |
| NR | FIRST | "CB-RECPT5" | 1/8" |
| NS | FIRST | "RECPT-PWRC1" | 1/4" |
| NT | FIRST | "RECPT-PWRC2" | 1/4" |
| NU | FIRST | "RECPT-PWRC3" | 1/4" |
| NV | FIRST | "RECPT-001" | 1/4" |
| NW | FIRST | "RECPT-002" | 1/4" |
| NX | FIRST | "RECPT-003" | 1/4" |
| NY | FIRST | "RECPT-004" | 1/4" |
| NZ | FIRST | "RECPT-005" | 1/4" |
| OA | FIRST | "TSTA-001" | 1/4" |
| OB | FIRST | "TSTA-002" | 1/4" |
| OC | FIRST | "TSTA-003" | 1/4" |
| OD | FIRST | "TSTA-004" | 1/4" |

## NAMEPLATE SCHEDULE
## MAIN INSTRUMENT/CONTROL PANEL
## "MCP-001"

| IDENTIFICATION MARK | LINE NO. | LEGEND PLATE DESCRIPTION | LETTER SIZE (MINIMUM) |
|---|---|---|---|
| OE | FIRST | "TSTA-005" | 1/4" |
| OF | FIRST | "TSTA-006" | 1/4" |
| OG | FIRST | "TSTA-007" | 1/4" |
| OH | FIRST | "TSTA-008" | 1/4" |
| OI | FIRST | "TSTA-009" | 1/4" |
| OJ | FIRST | "CB-R00-I/O" | 1/8" |
| OK | FIRST | "CB-R01-I/O" | 1/8" |
| OL | FIRST | "CB-R02-I/O" | 1/8" |
| OM | FIRST | "CB-R03-I/O" | 1/8" |
| ON | FIRST | "CB-R04-I/O" | 1/8" |
| OP | FIRST | "TB1-ESD" | 1/4" |
| OQ | FIRST | "SIT-P5" | 3/8" |
| | SECOND | SPEED INDICATING TRANSMITTER | 3/8" |
| OR | FIRST | "SIT-P7" | 3/8" |
| | SECOND | SPEED INDICATING TRANSMITTER | 3/8" |
| OS | FIRST | "TB1-R00-DO01" | 1/4" |
| OT | FIRST | "TB2-R00-DO01" | 1/4" |
| OU | FIRST | "TB3-R00-DO01" | 1/4" |
| OV | FIRST | "TB1-DCSX-P7" | 1/4" |
| OW | FIRST | "RELAY-DCSX-P7" | 1/4" |
| OX | FIRST | "TB3-DCSX-P7" | 1/4" |
| OY | FIRST | "TB1-DCSX-P6" | 1/4" |
| OZ | FIRST | "RELAY-DCSX-P6" | 1/4" |
| PA | FIRST | "TB3-DCSX-P6" | 1/4" |
| PB | FIRST | "TB1-DCSX-P5" | 1/4" |
| PC | FIRST | "RELAY-DCSX-P5" | 1/4" |
| PD | FIRST | "TB3-DCSX-P5" | 1/4" |
| PE | FIRST | "TB1-DCSX-P4" | 1/4" |
| PF | FIRST | "RELAY-DCSX-P4" | 1/4" |
| PG | FIRST | "TB3-DCSX-P4" | 1/4" |

REFERENCE DRAWINGS:

E-CWS-051 – MCP FRONT ELEVATION
E-CWS-052 – MCP INTERIOR ELEVATION
E-CWS-053 – "MCP-001" EQUIPMENT SCHEDULE
E-CWS-057 – E-CWS-061 – WIRING SCHEMATICS

DO NOT SCALE DRAWING. FOLLOW DIMENSIONS ONLY. ACCORDINGLY

2/23/2005

HARUTUNIAN ENGINEERING INCORPORATED
ENGINEERING AND ENVIRONMENTAL CONSULTANTS
305 EAST HUNTLAND DRIVE SUITE 500
AUSTIN, TEXAS 78752

REUSE OF DOCUMENTS
This document and the ideas and designs incorporated herein as an instrument of professional service has been developed, designed and prepared by Harutunian Engineering, Inc. and is not to be used, in whole or part, for any other project without the written authorization of Water District No. 10 and Harutunian Engineering, Inc. © 2005

HEI
HEI
HEI
FEBRUARY 2005
NONE

TRAVIS COUNTY WATER CONTROL & IMPROVEMENT DISTRICT NO. 10
PUMP STATION NO 1

MAIN CONTROL PANEL "MCP-001"
NAMEPLATE SCHEDULE
(SHEET 3 OF 3)

2002-210 | SHEET 104 | E-CWS-056

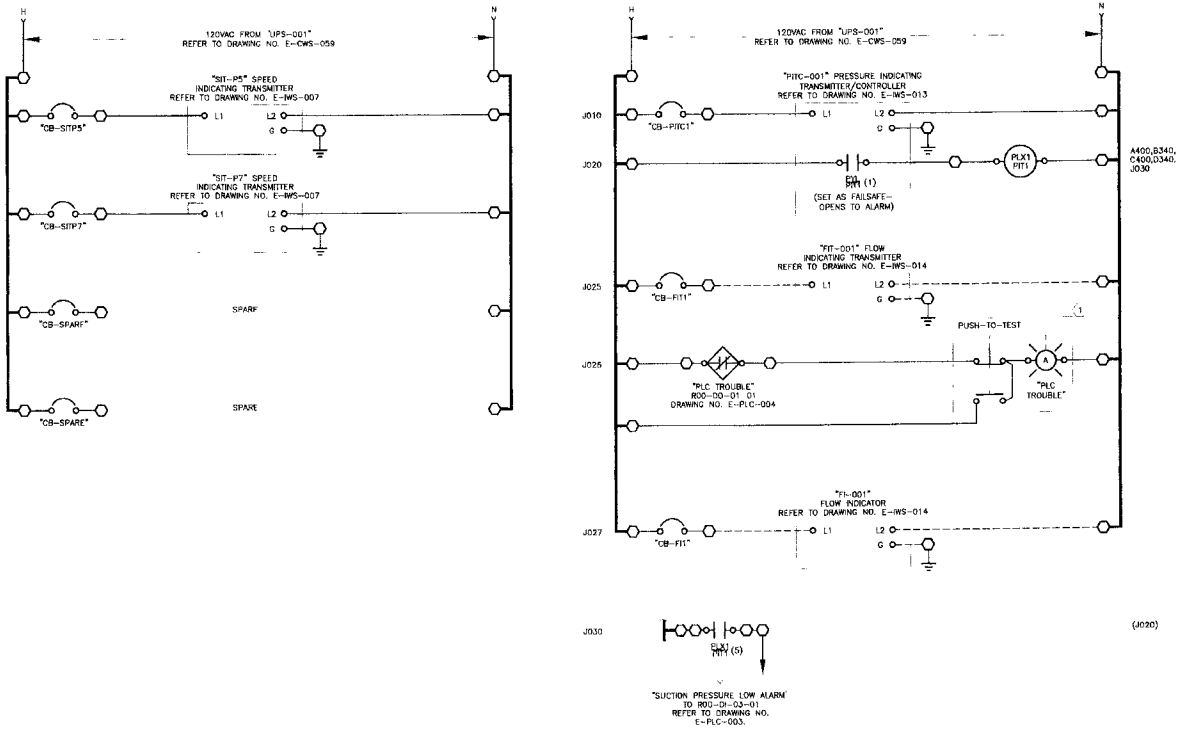


## WIRING AND TERMINAL DEVICE LEGEND:

- - - INDICATES WIRING BETWEEN PANELS OR TO A FIELD MOUNTED DEVICE.

o DEVICE WIRING TERMINAL

O PROPOSED TERMINAL BLOCK LOCATED IN PROPOSED MAIN CONTROL PANEL "MCP-001" ANY DEVICE SHOWN WITH DEVICE WIRING TERMINALS CONNECTED DIRECTLY TO THESE SYMBOLS WITH SOLID LINES IS ALSO LOCATED IN MAIN CONTROL PANEL "MCP-001"

## REFERENCE DRAWINGS:

E-FP-004 - EQUIPMENT ARRANGEMENT PLAN

E-CWS-022 - E-CWS-041 - PUMP CONTROL LOGIC

E-CWS-059 - POWER WIRING SCHEMATIC

E-IWS-009 - E-IWS-018 - INSTRUMENT WIRING SCHEMATICS

E-PLC-002 - E-PLC-004 - PLC I/O WIRING SCHEMATICS

E-CWS-051 - E-CWS-052 - MCP ELEVATIONS

| CONTROL LOGIC DEVICE DESCRIPTIONS | |
|---|---|
| RUNG NO. | CONTROL LOGIC DEVICE DESCRIPTIONS |
| J020 | LOW SUCTION PRESSURE AUXILIARY RELAY 1 NORMALLY ENERGIZED. DE-ENERGIZES WHEN LOW SUCTION PRESSURE IS DETECTED |

## KEY NOTES:

(1) INDICATING PILOT LIGHT WITH INTEGRAL MOMENTARY ACTION "PUSH-TO-TEST" PUSHBUTTON. REFER TO ELECTRICAL SPECIFICATIONS. MOUNT TO FACE OF MAIN CONTROL PANEL IMMEDIATELY ADJACENT TO OPERATOR INTERFACE UNIT

ORIGINAL DRAWING IS 22" X 34". ADJUST SCALE ACCORDINGLY

STATE OF TEXAS
K. HARUTUNIAN
5909
REGISTERED
PROFESSIONAL ENGINEER
2/21/2005

HARUTUNIAN ENGINEERING INCORPORATED
ENGINEERING AND ENVIRONMENTAL CONSULTANTS
303 EAST HUNTLAND DRIVE SUITE 500
AUSTIN, TEXAS 78752

REUSE OF DOCUMENTS
This document and the ideas and designs incorporated herein as an instrument of professional service has been developed, designed and prepared by Harutunian Engineering, Inc. and is not to be used, in whole or part, for any other project without the written authorization of Water District No. 10 and Harutunian Engineering, Inc. © 2005

DRN HEI
CHK HEI
APPR HEI
DATE FEBRUARY 2005
SCALE NONE

TRAVIS COUNTY WATER CONTROL & IMPROVEMENT DISTRICT NO. 10
PUMP STATION NO. 1

INSTRUMENT POWER WIRING SCHEMATIC
(SHEET 1 OF 5)

JOB NO. 2002-210 | SHEET 105 | DWG NO. E-CWS-057

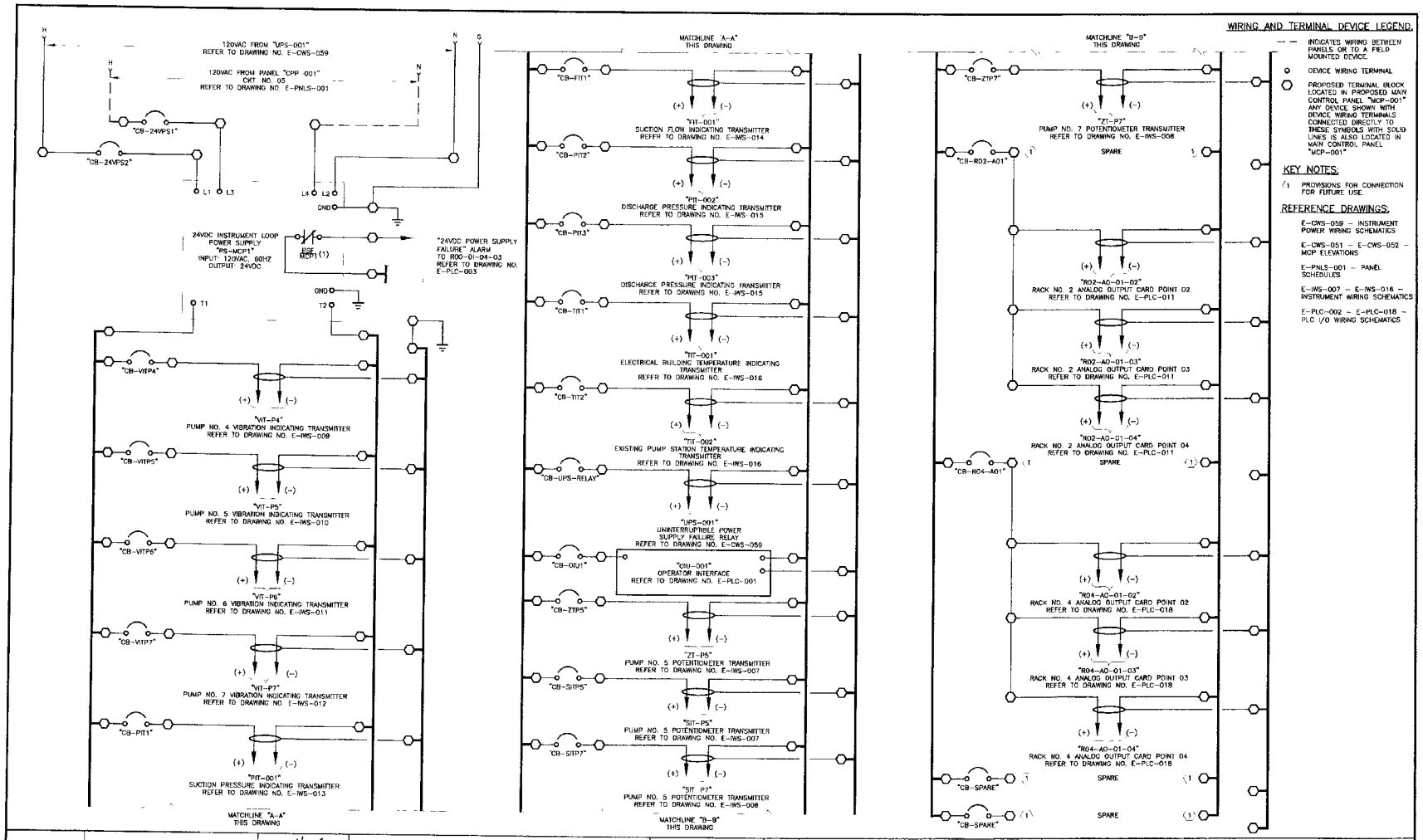


HARUTUNIAN ENGINEERING INCORPORATED
ENGINEERING AND ENVIRONMENTAL CONSULTANTS
305 EAST HUNTLAND DRIVE SUITE 500
AUSTIN, TEXAS 78752

REUSE OF DOCUMENTS
This document and the ideas and designs incorporated herein as an instrument of professional service has been developed, designed and prepared by Harutunian Engineering, Inc. and is not to be used, in whole or part, for any other project without the written authorization of Water District No. 10 and Harutunian Engineering, Inc. © 2005

HEI
HEI
HEI
FEBRUARY 2005
NONE

TRAVIS COUNTY WATER CONTROL & IMPROVEMENT DISTRICT NO. 10
PUMP STATION NO. 1

INSTRUMENT POWER WIRING SCHEMATIC
(SHEET 2 OF 5)

2002-210 | SHEET 106 | E-CWS-058

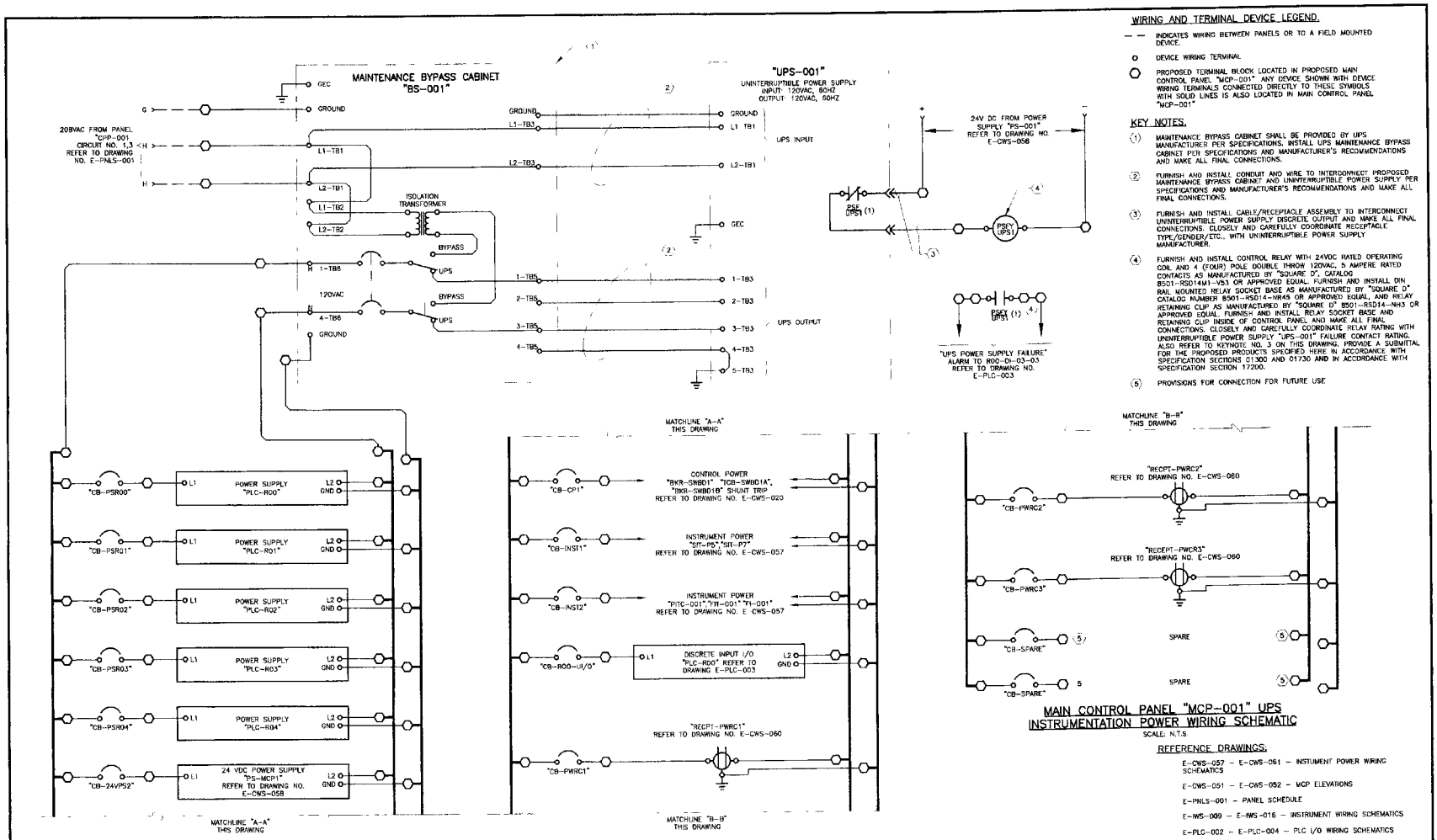


## WIRING AND TERMINAL DEVICE LEGEND.

- — — INDICATES WIRING BETWEEN PANELS OR TO A FIELD MOUNTED DEVICE.
- o DEVICE WIRING TERMINAL
- ○ PROPOSED TERMINAL BLOCK LOCATED IN PROPOSED MAIN CONTROL PANEL "MCP-001". ANY DEVICE SHOWN WITH DEVICE WIRING TERMINALS CONNECTED DIRECTLY TO THESE SYMBOLS WITH SOLID LINES IS ALSO LOCATED IN MAIN CONTROL PANEL "MCP-001"

## KEY NOTES.

1. MAINTENANCE BYPASS CABINET SHALL BE PROVIDED BY UPS MANUFACTURER PER SPECIFICATIONS. INSTALL UPS MAINTENANCE BYPASS CABINET PER SPECIFICATIONS AND MANUFACTURER'S RECOMMENDATIONS AND MAKE ALL FINAL CONNECTIONS.
2. FURNISH AND INSTALL CONDUIT AND WIRE TO INTERCONNECT PROPOSED MAINTENANCE BYPASS CABINET AND UNINTERRUPTIBLE POWER SUPPLY PER SPECIFICATIONS AND MANUFACTURER'S RECOMMENDATIONS AND MAKE ALL FINAL CONNECTIONS.
3. FURNISH AND INSTALL CABLE/RECEPTACLE ASSEMBLY TO INTERCONNECT UNINTERRUPTIBLE POWER SUPPLY DISCRETE OUTPUT AND MAKE ALL FINAL CONNECTIONS. CLOSELY AND CAREFULLY COORDINATE RECEPTACLE TYPE/GENDER/ETC., WITH UNINTERRUPTIBLE POWER SUPPLY MANUFACTURER.
4. FURNISH AND INSTALL CONTROL RELAY WITH 24VDC RATED OPERATING COIL AND 4 (FOUR) POLE DOUBLE THROW 120VAC, 5 AMPERE RATED CONTACTS AS MANUFACTURED BY "SQUARE D", CATALOG 8501-RSD14M1-V53 OR APPROVED EQUAL. FURNISH AND INSTALL DIN RAIL MOUNTED RELAY SOCKET BASE AS MANUFACTURED BY "SQUARE D" CATALOG NUMBER 8501-RSD14-NR45 OR APPROVED EQUAL, AND RELAY RETAINING CLIP AS MANUFACTURED BY "SQUARE D" 8501-RSD14-NH3 OR APPROVED EQUAL. FURNISH AND INSTALL RELAY SOCKET BASE AND RETAINING CLIP INSIDE OF CONTROL PANEL AND MAKE ALL FINAL CONNECTIONS. CLOSELY AND CAREFULLY COORDINATE RELAY RATING WITH UNINTERRUPTIBLE POWER SUPPLY "UPS-001" FAILURE CONTACT RATING. ALSO REFER TO KEYNOTE NO. 3 ON THIS DRAWING. PROVIDE A SUBMITTAL FOR THE PROPOSED PRODUCTS SPECIFIED HERE IN ACCORDANCE WITH SPECIFICATION SECTIONS 01300 AND 01730 AND IN ACCORDANCE WITH SPECIFICATION SECTION 17200.
5. PROVISIONS FOR CONNECTION FOR FUTURE USE

## MAIN CONTROL PANEL "MCP-001" UPS INSTRUMENTATION POWER WIRING SCHEMATIC

SCALE: N.T.S

### REFERENCE DRAWINGS:

- E-CWS-057 – E-CWS-061 – INSTUMENT POWER WIRING SCHEMATICS
- E-CWS-051 – E-CWS-052 – MCP ELEVATIONS
- E-PNLS-001 – PANEL SCHEDULE
- E-IWS-009 – E-IWS-016 – INSTRUMENT WIRING SCHEMATICS
- E-PLC-002 – E-PLC-004 – PLC I/O WIRING SCHEMATICS

HARUTUNIAN ENGINEERING INCORPORATED
ENGINEERING AND ENVIRONMENTAL CONSULTANTS
305 EAST HUNTLAND DRIVE SUITE 500
AUSTIN, TEXAS 78752

REUSE OF DOCUMENTS
This document and the ideas and designs incorporated herein as an instrument of professional service has been developed, designed and prepared by Harutunian Engineering, Inc. and is not to be used, in whole or part, for any other project without the written authorization of Water District No. 10 and Harutunian Engineering, Inc. © 2005

HEI
HEI
HEI
FEBRUARY 2005
NONE

TRAVIS COUNTY WATER CONTROL & IMPROVEMENT DISTRICT NO 10
PUMP STATION NO 1

INSTRUMENT POWER WIRING SCHEMATIC
(SHEET 3 OF 5)

2002-210 | SHEET 107 | E-CWS-059

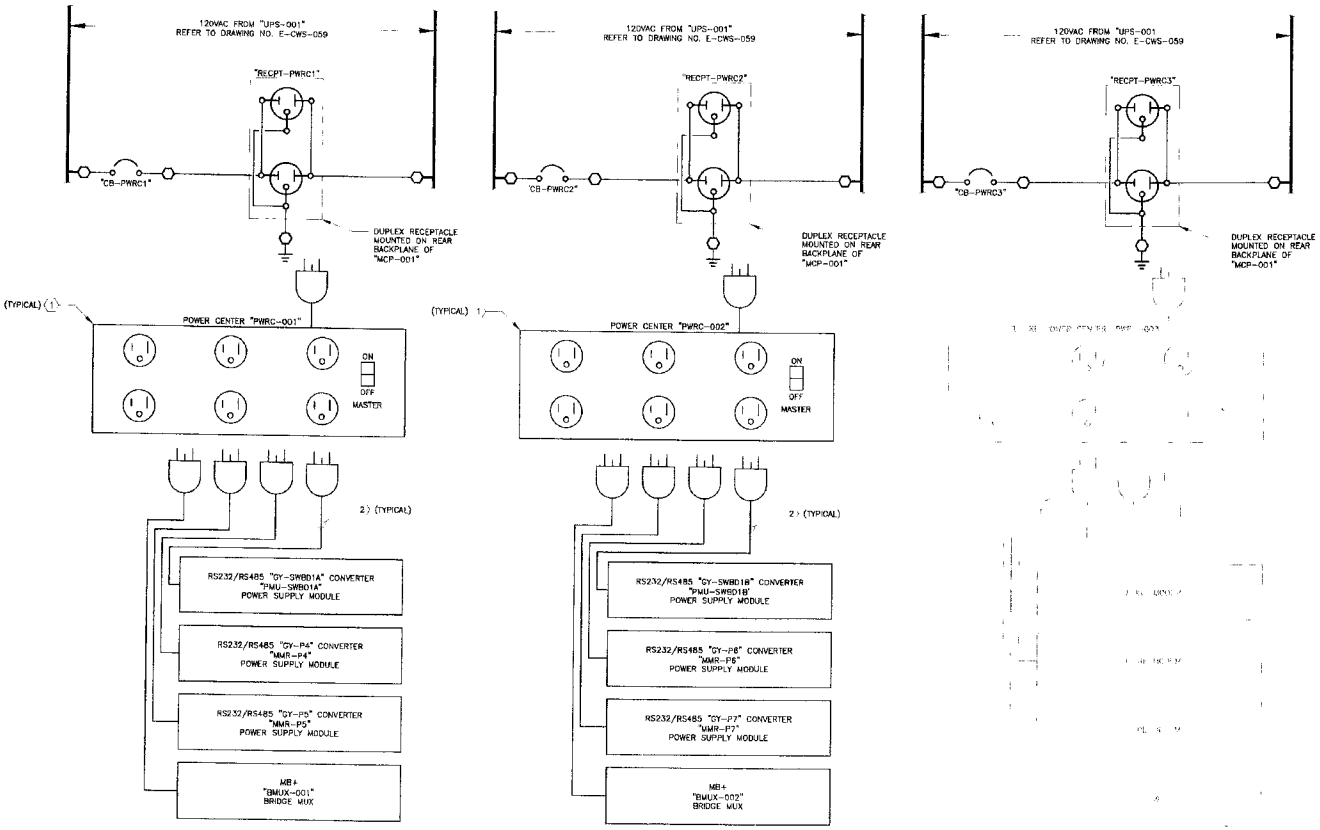


## WIRING AND TERMINAL DEVICE LEGEND:

— — INDICATES WIRING BETWEEN PANELS OR TO A FIELD MOUNTED DEVICE.

o DEVICE WIRING TERMINAL

⬡ PROPOSED TERMINAL BLOCK LOCATED IN PROPOSED MAIN CONTROL PANEL "MCP-001" ANY DEVICE SHOWN WITH DEVICE WIRING TERMINALS CONNECTED DIRECTLY TO THESE SYMBOLS WITH SOLID LINES IS ALSO LOCATED IN MAIN CONTROL PANEL "MCP-001"

## KEY NOTES:

1) "KENSINGTON" OR APPROVED EQUAL SURGE PROTECTOR 6-OUTLET BASIC ADAPTER MODEL, 520 JOULES OF DISSIPATION, EMI/RFI NOISE FILTRATION, 6' CORD, EXTRA-WIDE OUTLET SPACES ACCOMMODATES UP TO 6 AC ADAPTERS, COLOR-CODED RINGS WITH MATCHING CORD LABELS ALLOW FOR EASY IDENTIFICATION OF CURD SOURCE WHEN SEVERAL OR ALL OUTLETS ARE IN USE. FURNISH AND INSTALL POWER CENTER TO CONNECT RS232/RS485 CONVERTERS, BRIDGE MUX, ETC. MOUNT ON SLIDE OUT SHELF INSIDE OF CONTROL PANEL "MCP-001" ALSO REFER TO THE "MCP-001" INTERIOR FRONT ELEVATION DRAWING FOR ADDITIONAL INFORMATION. PROVIDE A SUBMITTAL FOR THE PROPOSED PRODUCT SPECIFIED HERE IN ACCORDANCE WITH SPECIFICATION SECTIONS 01300 AND 01730 AND IN ACCORDANCE WITH SPECIFICATION SECTION 17200.

2) CORD AND PLUG ASSEMBLY PROVIDED BY MANUFACTURER OF EQUIPMENT. CLOSELY AND CAREFULLY COORDINATE LENGTH OF CORD WITH LOCATION/ROUTE INSIDE OF PROPOSED CONTROL PANEL.

## GENERAL NOTES:

1. CLOSELY AND CAREFULLY COORDINATE/VERIFY ALL POINTS OF CONNECTION PRIOR TO COMMENCING INSTALLATION/MODIFICATION ACTIVITIES.
2. DARK LINEWORK DENOTES PROPOSED EQUIPMENT. LIGHT LINEWORK DENOTES FUTURE EQUIPMENT

## REFERENCE DRAWINGS:

E-CWS-052 – MCP INTERIOR ELEVATION

E-CWS-059 – UPS POWER WIRING SCHEMATIC

E-PLC-001 – PLC ARCHITECTURE

BAR EQUAL ON ORIGINAL DRAWING IF NOT ADJUST SCALE ACCORDINGLY

2/2/2005

HARUTUNIAN ENGINEERING INCORPORATED

ENGINEERING AND ENVIRONMENTAL CONSULTANTS
305 EAST HUNTLAND DRIVE SUITE 500
AUSTIN, TEXAS 78752

REUSE OF DOCUMENTS
This document and the ideas and designs incorporated herein as an instrument of professional service has been developed, designed and prepared by Harutunian Engineering, Inc. and is not to be used, in whole or part, for any other project without the written authorization of Water District No. 10 and Harutunian Engineering, Inc. © 2005

HEI
HEI
HEI
FEBRUARY 2005
NONE

TRAVIS COUNTY WATER CONTROL & IMPROVEMENT DISTRICT NO 10
PUMP STATION NO. 1

INSTRUMENT POWER WIRING SCHEMATIC
(SHEET 4 OF 5)

2002-210 | SHEET 108 | E-CWS-060

## WIRING AND TERMINAL DEVICE LEGEND:

— — INDICATES WIRING BETWEEN PANELS OR TO A FIELD MOUNTED DEVICE.

o DEVICE WIRING TERMINAL

O PROPOSED TERMINAL BLOCK LOCATED IN PROPOSED MAIN CONTROL PANEL "MCP-001" ANY DEVICE SHOWN WITH DEVICE WIRING TERMINALS CONNECTED DIRECTLY TO THESE SYMBOLS WITH SOLID LINES IS ALSO LOCATED IN MAIN CONTROL PANEL "MCP-001"

## REFERENCE DRAWINGS:

E-CWS-051 – E-CWS-052 – MCP ELEVATIONS

E-PNLS-001 – PANEL SCHEDULES

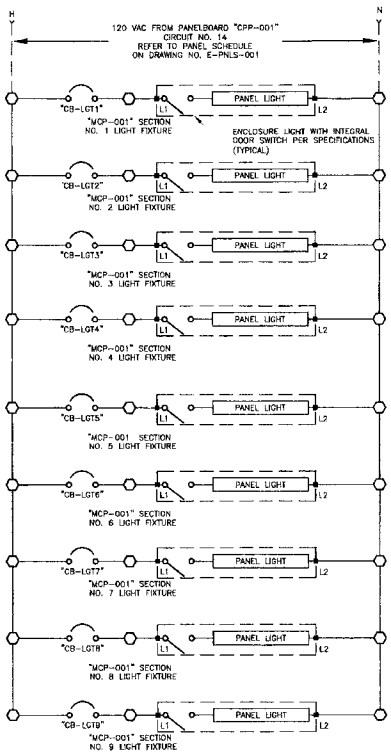


CONTROL PANEL "MCP-001"
LIGHTING WIRING SCHEMATIC
SCALE: NTS

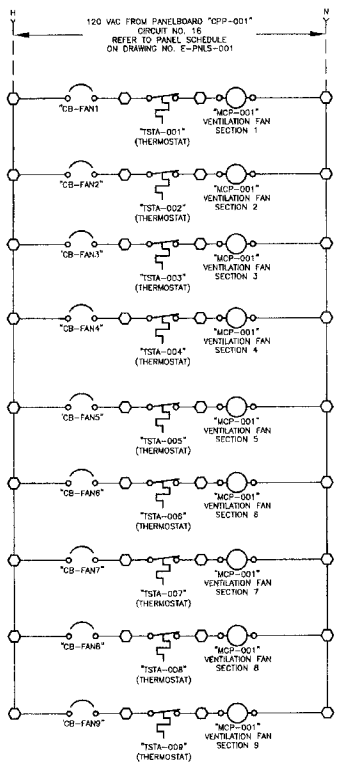


CONTROL PANEL "MCP-001"
VENTILATION FAN MOTOR WIRING
SCHEMATIC
SCALE: NTS

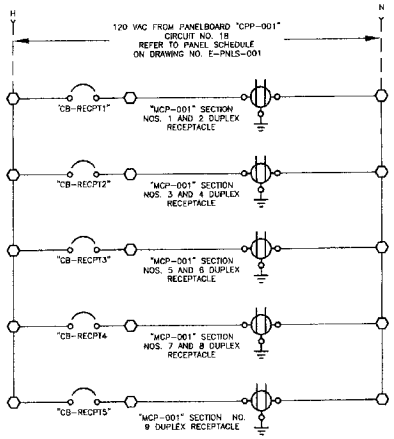


CONTROL PANEL "MCP-001"
RECEPTACLE WIRING SCHEMATIC
SCALE: NTS

REFERENCE BUILDING DRAWING. ENGINEER'S SEAL IS NOT REQUIRED ON THIS SCALE DRAWINGS

STATE OF TEXAS
K. A. WEBB
59
REGISTERED
PROFESSIONAL ENGINEER
2/21/2005

HARUTUNIAN ENGINEERING INCORPORATED
ENGINEERING AND ENVIRONMENTAL CONSULTANTS
305 EAST HUNTLAND DRIVE SUITE 300
AUSTIN, TEXAS 78752

REUSE OF DOCUMENTS
This document and the ideas and designs incorporated herein as an instrument of professional service has been developed, designed and prepared by Harutunian Engineering, Inc. and is not to be used, in whole or part, for any other project without the written authorization of Water District No. 10 and Harutunian Engineering, Inc. © 2005

HEI
HEI
HEI
FEBRUARY 2005
NONE

TRAVIS COUNTY WATER CONTROL & IMPROVEMENT DISTRICT NO 10
PUMP STATION NO. 1

INSTRUMENT POWER WIRING SCHEMATIC
(SHEET 5 OF 5)

PROJECT 2002-210 | SHEET 109 | DWG NO. E-CWS-061

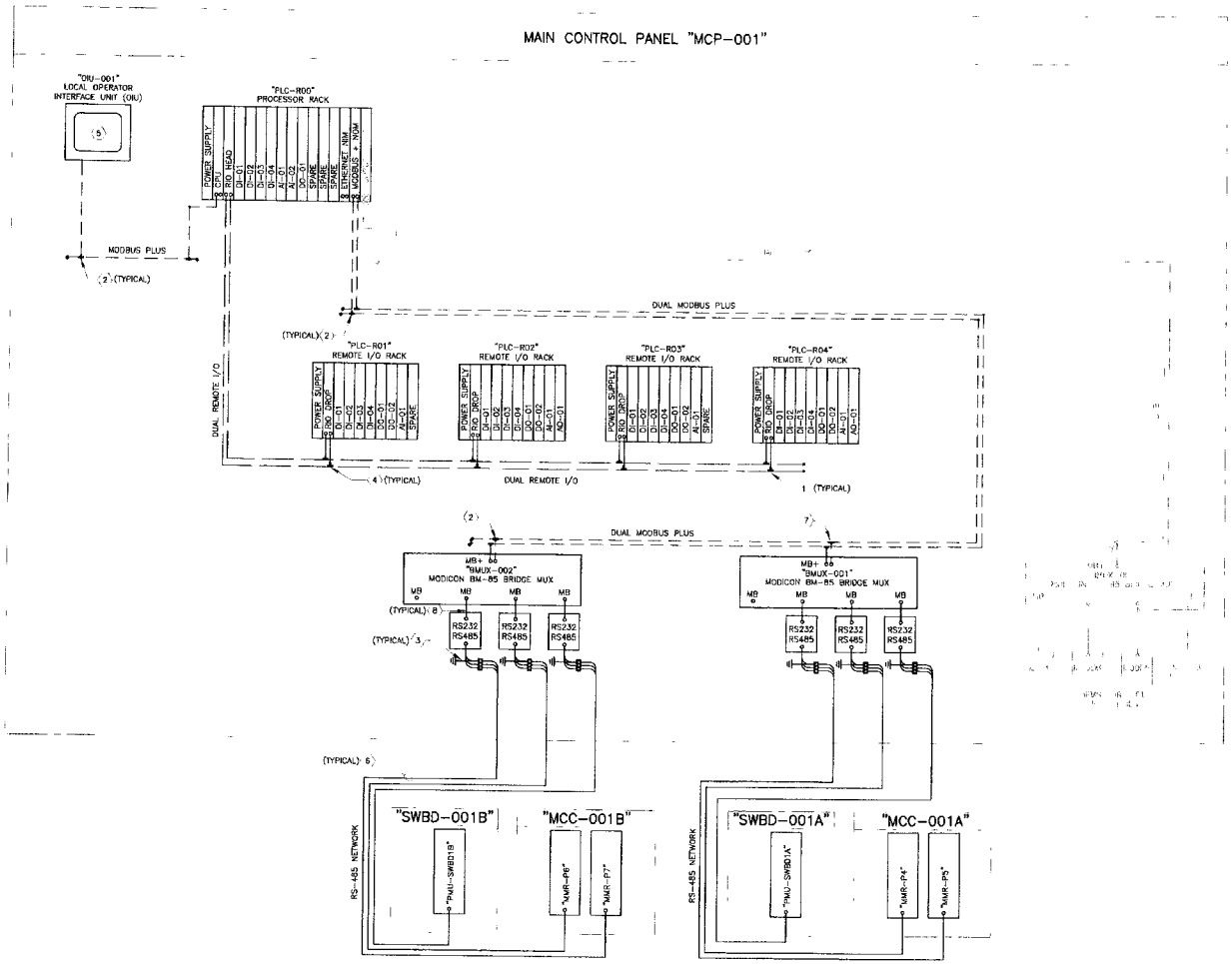


## KEY NOTES:

1. REMOTE I/O TAP WITH TRUNK LINE TERMINATOR. REFER TO CONTRACT SPECIFICATIONS.
2. MODBUS PLUS RUGGEDIZED TAP WITH TERMINATOR. REFER TO CONTRACT SPECIFICATIONS.
3. RS-485 NETWORK CABLE GROUNDED AT THIS POINT
4. REMOTE I/O TAP. REFER TO CONTRACT SPECIFICATIONS.
5. FURNISH AND INSTALL OPERATOR INTERFACE UNIT (OIU). REFER TO CONTRACT SPECIFICATIONS.
6. #16 SHIELDED TWISTED PAIR CABLE.
7. MODBUS PLUS RUGGEDIZED TAP. REFER TO CONTRACT SPECIFICATIONS.
8. MODBUS RS232. REFER TO QUANTUM AUTOMATION SERIES HARDWARE REFERENCE GUIDE.

## GENERAL NOTES:

1. CLOSELY AND CAREFULLY COORDINATE ALL CABLE CONNECTOR TYPES BETWEEN ALL COMPONENTS. FURNISH AND INSTALL ALL CABLES AND ALL NECESSARY CONNECTORS AND MAKE ALL FINAL CONNECTIONS.
2. DARK LINEWORK DENOTES PROPOSED EQUIPMENT. LIGHT LINEWORK DENOTES FUTURE EQUIPMENT

## REFERENCE DRAWINGS:

E-FP-004 – EQUIPMENT ARRANGEMENT

E-CWS-019 – TONE TELEMETRY SYSTEM – RENOVATION

E-CWS-051 – E-CWS-052 – MCP ELEVATIONS

E-CWS-057 – E-CWS-061 – CONTROL WIRING SCHEMATICS

E-PLC-002 – E-PLC-018 – PLC I/O WIRING SCHEMATICS

2/2/2005

HARUTUNIAN ENGINEERING INCORPORATED

ENGINEERING AND ENVIRONMENTAL CONSULTANTS
305 EAST HUNTLAND DRIVE SUITE 500
AUSTIN, TEXAS 78752

REUSE OF DOCUMENTS
This document and the ideas and designs incorporated herein as an instrument of professional service has been developed, designed and prepared by Harutunian Engineering, Inc. and is not to be used, in whole or part, for any other project without the written authorization of Water District No. 10 and Harutunian Engineering, Inc. © 2003

HEI
HEI
HEI
FEBRUARY 2005
NONE

TRAVIS COUNTY WATER CONTROL & IMPROVEMENT DISTRICT NO 10
PUMP STATION NO. 1

PLC ARCHITECTURE

2002-210 | SHEET 110 | E-PLC-001

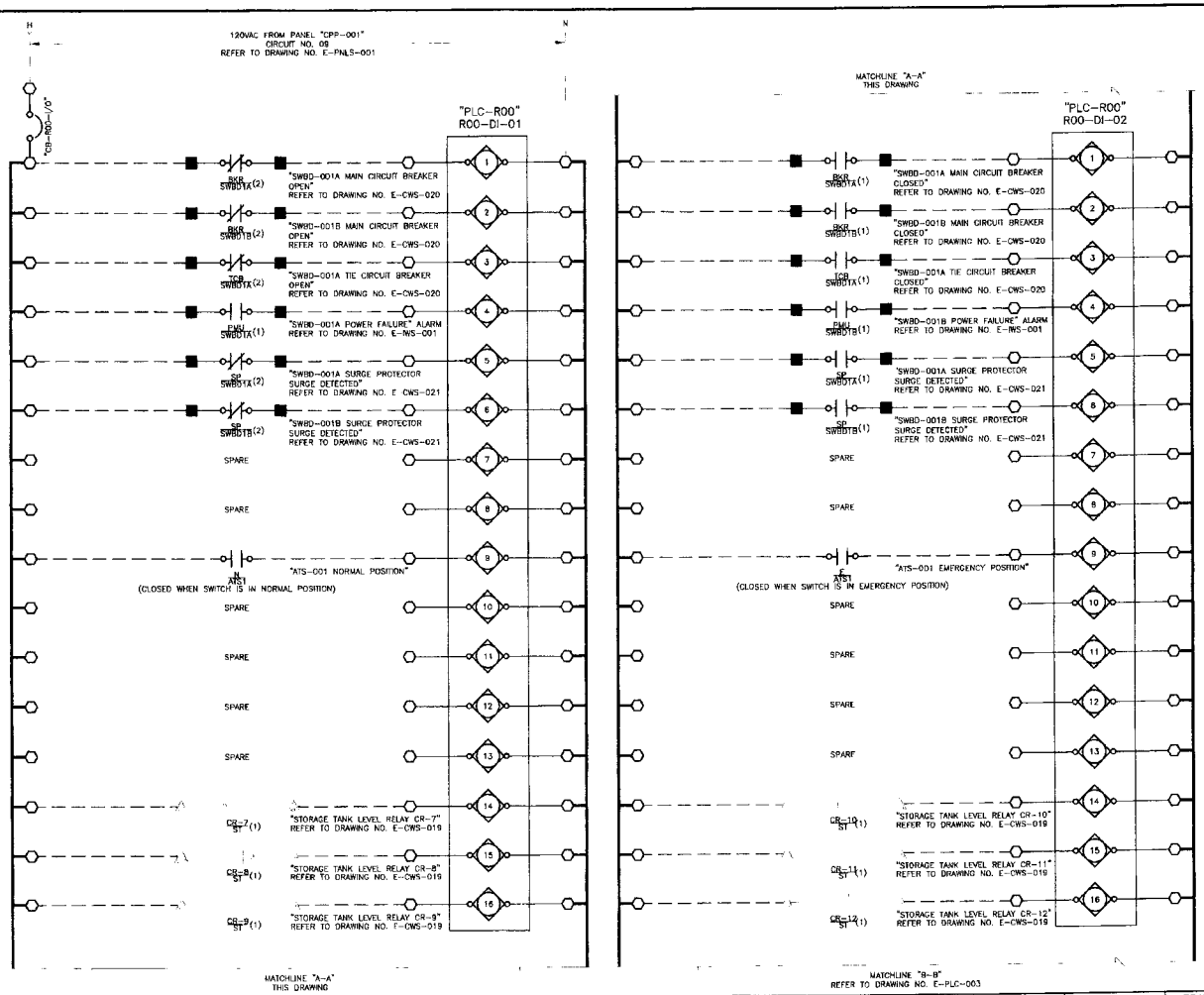


## WIRING AND TERMINAL DEVICE LEGEND.

- — — INDICATES WIRING BETWEEN PANELS OR TO A FIELD MOUNTED DEVICE.
- o DEVICE WIRING TERMINAL.
- □ PROPOSED TERMINAL BLOCK LOCATED IN PROPOSED 480V MOTOR CONTROL CENTER (MCC) "MCC-001A" OR "MCC-001B" AS APPLICABLE. ANY DEVICE SHOWN WITH DEVICE WIRING TERMINALS CONNECTED DIRECTLY TO THESE SYMBOLS WITH SOLID LINES IS ALSO LOCATED IN PROPOSED 480V MCC "MCC-001A" OR "MCC-001B", AS APPLICABLE.
- ■ PROPOSED TERMINAL BLOCK LOCATED IN PROPOSED 480V SWITCHBOARD (SWBD) "SWBD-001A" OR "SWBD-001B", AS APPLICABLE. ANY DEVICE SHOWN WITH DEVICE WIRING TERMINALS CONNECTED DIRECTLY TO THESE SYMBOLS WITH SOLID LINES IS ALSO LOCATED IN PROPOSED 480V MCC "SWBD-001A" OR "SWBD-001B", AS APPLICABLE.
- ⬡ PROPOSED TERMINAL BLOCK LOCATED IN PROPOSED MAIN CONTROL PANEL "MCP-001" ANY DEVICE SHOWN WITH DEVICE WIRING TERMINALS CONNECTED DIRECTLY TO THESE SYMBOLS WITH SOLID LINES IS ALSO LOCATED IN MAIN CONTROL PANEL "MCP-001"
- ▲ EXISTING TERMINAL BLOCK LOCATED IN EXISTING TONE TELEMETRY CABINET ANY DEVICE SHOWN WITH DEVICE TERMINALS CONNECTED DIRECTLY TO THESE SYMBOLS WITH SOLID LINES IS LOCATED IN OR ON THE EQUIPMENT

## REFERENCE DRAWINGS.

E-FP-003 – EXISTING PUMP STATION FLOOR PLAN
E-FP-004 – EQUIPMENT ARRANGEMENT PLAN
E-CWS-019 – TONE TELEMETRY SYSTEM RENOVATION
E-CWS-020 – E-CWS-061 – CONTROL SCHEMATICS
E-CWS-051 – E-CWS-052 – MCP ELEVATIONS
E-PNLS-001 – PANEL SCHEDULE
E-PLC-001 – PLC ARCHITECTURE

B.E. SMITH, INC. ORIGINAL DRAWING TO AND ONE (1) PRINT FOR AS-BUILT

STATE OF TEXAS — K. HARUTUNIAN — REGISTERED PROFESSIONAL ENGINEER — 2/21/2005

HARUTUNIAN ENGINEERING INCORPORATED
ENGINEERING AND ENVIRONMENTAL CONSULTANTS
305 EAST HUNTLAND DRIVE SUITE 500
AUSTIN, TEXAS 78752

REUSE OF DOCUMENTS
This document and the ideas and designs incorporated herein as an instrument of professional service has been developed, designed and prepared by Harutunian Engineering, Inc. and is not to be used, in whole or part, for any other project without the written authorization of Water District No. 10 and Harutunian Engineering, Inc. © 2005

| | |
|---|---|
| DESIGNED BY | HEI |
| DRAWN BY | HEI |
| REVIEWED BY | HEI |
| DATE | FEBRUARY 2005 |
| SCALE | NONE |

TRAVIS COUNTY WATER CONTROL & IMPROVEMENT DISTRICT NO 10
PUMP STATION NO 1

PUMP STATION GENERAL
PLC I/O WIRING SCHEMATIC
(SHEET 1 OF 3)

JOB NO. 2002-210 | SHEET 111 | DWG NO. E-PLC-002

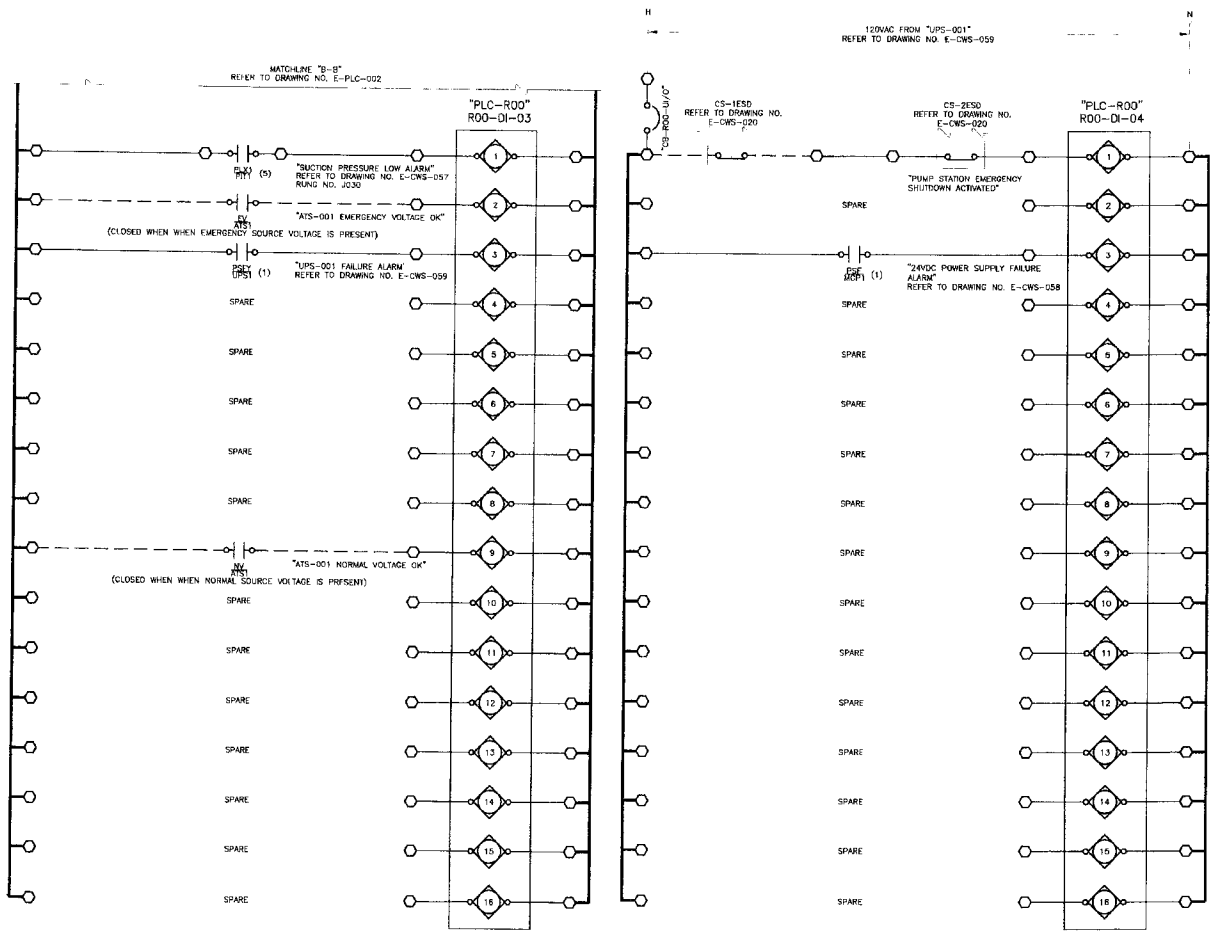


## WIRING AND TERMINAL DEVICE LEGEND:

- — — INDICATES WIRING BETWEEN PANELS OR TO A FIELD MOUNTED DEVICE
- ○ DEVICE WIRING TERMINAL
- □ PROPOSED TERMINAL BLOCK LOCATED IN PROPOSED 480V MOTOR CONTROL CENTER (MCC) "MCC-001A" OR "MCC-001B", AS APPLICABLE. ANY DEVICE SHOWN WITH DEVICE WIRING TERMINALS CONNECTED DIRECTLY TO THESE SYMBOLS WITH SOLID LINES IS ALSO LOCATED IN PROPOSED 480V MCC "MCC-001A" OR "MCC-001B", AS APPLICABLE.
- ■ PROPOSED TERMINAL BLOCK LOCATED IN PROPOSED 480V SWITCHBOARD (SWBD) "SWBD-001A" OR "SWBD-001B", AS APPLICABLE. ANY DEVICE SHOWN WITH DEVICE WIRING TERMINALS CONNECTED DIRECTLY TO THESE SYMBOLS WITH SOLID LINES IS ALSO LOCATED IN PROPOSED 480V MCC "SWBD-001A" OR "SWBD-001B", AS APPLICABLE.
- ⬡ PROPOSED TERMINAL BLOCK LOCATED IN PROPOSED MAIN CONTROL PANEL "MCP-001" ANY DEVICE SHOWN WITH DEVICE WIRING TERMINALS CONNECTED DIRECTLY TO THESE SYMBOLS WITH SOLID LINES IS ALSO LOCATED IN MAIN CONTROL PANEL "MCP-001"
- ▲ EXISTING TERMINAL BLOCK LOCATED IN EXISTING TONE TELEMETRY CABINET ANY DEVICE SHOWN WITH DEVICE TERMINALS CONNECTED DIRECTLY TO THESE SYMBOLS WITH SOLID LINES IS LOCATED IN OR ON THE EQUIPMENT

## REFERENCE DRAWINGS:

E-FP-003 – EXISTING PUMP STATION FLOOR PLAN

E-FP-004 – EQUIPMENT ARRANGEMENT PLAN

E-CWS-020 – E-CWS-061 – CONTROL SCHEMATICS

E-CWS-051 – E-CWS-052 – MCP ELEVATIONS

E-PLC-001 – PLC ARCHITECTURE

BAR LENGTH ON ORIGINAL IS 1 INCH. FOR ALL OTHER SIZES ADJUST SCALE ACCORDINGLY

K A Harutunian
STATE OF TEXAS
KAREN A. HARUTUNIAN
REGISTERED PROFESSIONAL ENGINEER
2/21/2005

HARUTUNIAN ENGINEERING INCORPORATED
ENGINEERING AND ENVIRONMENTAL CONSULTANTS
305 EAST HUNTLAND DRIVE SUITE 500
AUSTIN, TEXAS 78752

REUSE OF DOCUMENTS
This document and the ideas and designs incorporated herein as an instrument of professional service has been developed, designed and prepared by Harutunian Engineering, Inc. and is not to be used, in whole or part, for any other project without the written authorization of Water District No. 10 and Harutunian Engineering, Inc. © 2005

DESIGNED BY HEI
DRAWN BY HEI
CHECKED BY HEI
DATE FEBRUARY 2005
SCALE NONE

TRAVIS COUNTY WATER CONTROL & IMPROVEMENT DISTRICT NO 10
PUMP STATION NO 1

PUMP STATION GENERAL
PLC I/O WIRING SCHEMATIC
(SHEET 2 OF 3)

JOB NO. 2002-210 | SHEET 112 | DWG NO. E-PLC-003

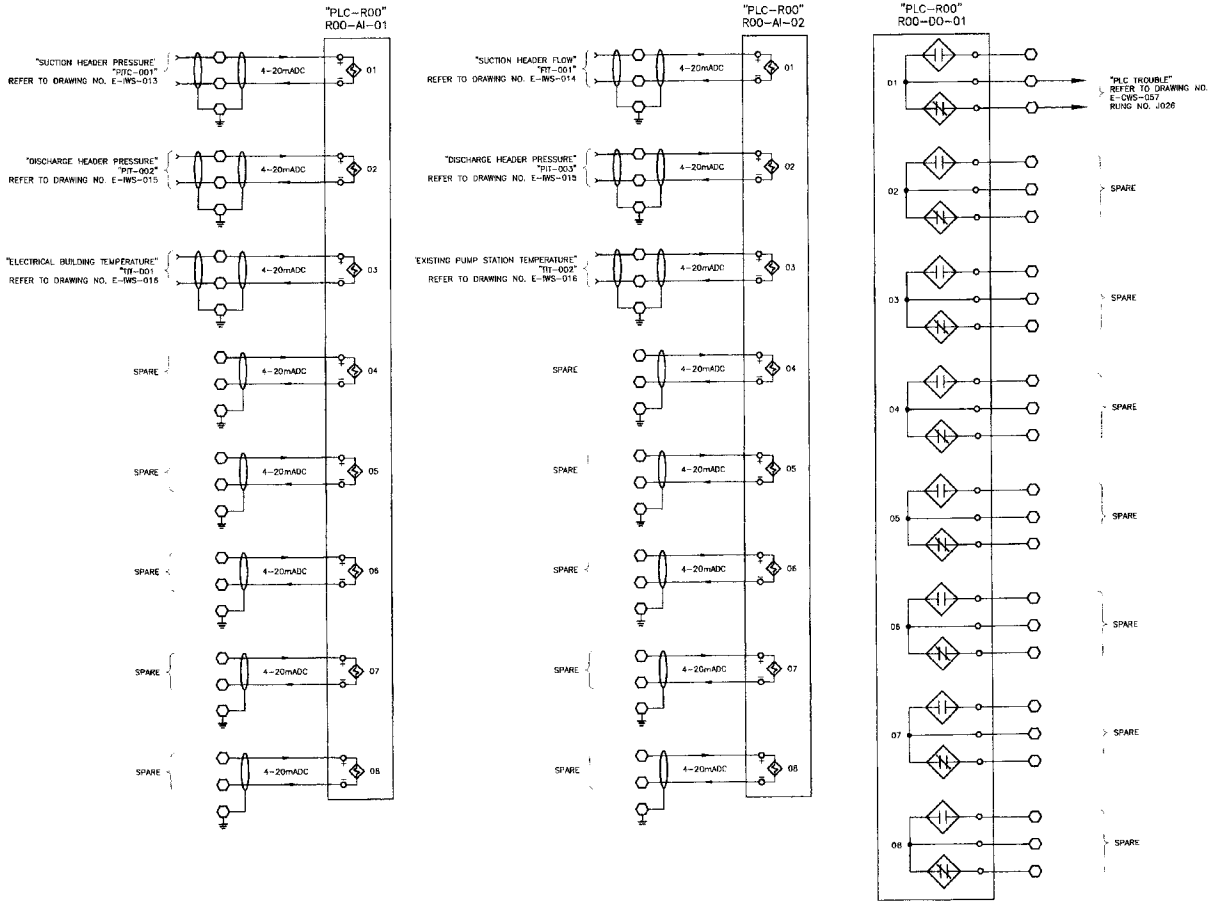


## WIRING AND TERMINAL DEVICE LEGEND:

- — — INDICATES WIRING BETWEEN PANELS OR TO A FIELD MOUNTED DEVICE.
- o DEVICE WIRING TERMINAL
- □ PROPOSED TERMINAL BLOCK LOCATED IN PROPOSED 480V MOTOR CONTROL CENTER (MCC) "MCC-001A" OR "MCC-001B" AS APPLICABLE. ANY DEVICE SHOWN WITH DEVICE WIRING TERMINALS CONNECTED DIRECTLY TO THESE SYMBOLS WITH SOLID LINES IS ALSO LOCATED IN PROPOSED 480V MCC "MCC-001A" OR "MCC-001B", AS APPLICABLE.
- ■ PROPOSED TERMINAL BLOCK LOCATED IN PROPOSED 480V SWITCHBOARD (SWBD) "SWBD-001A" OR "SWBD-001B" AS APPLICABLE. ANY DEVICE SHOWN WITH DEVICE WIRING TERMINALS CONNECTED DIRECTLY TO THESE SYMBOLS WITH SOLID LINES IS ALSO LOCATED IN PROPOSED 480V MCC "SWBD-001A" OR "SWBD-001B", AS APPLICABLE.
- ○ PROPOSED TERMINAL BLOCK LOCATED IN PROPOSED MAIN CONTROL PANEL "MCP-001" ANY DEVICE SHOWN WITH DEVICE WIRING TERMINALS CONNECTED DIRECTLY TO THESE SYMBOLS WITH SOLID LINES IS ALSO LOCATED IN MAIN CONTROL PANEL "MCP-001"
- ▲ EXISTING TERMINAL BLOCK LOCATED IN EXISTING TONE TELEMETRY CABINET. ANY DEVICE SHOWN WITH DEVICE TERMINALS CONNECTED DIRECTLY TO THESE SYMBOLS WITH SOLID LINES IS LOCATED IN OR ON THE EQUIPMENT

## REFERENCE DRAWINGS:

E-FP-003 – EXISTING PUMP STATION FLOOR PLAN

E-FP-004 – EQUIPMENT ARRANGEMENT PLAN

E-CWS-020 – E-CWS-061 – CONTROL SCHEMATICS

E-CWS-051 – E-CWS-052 – MCP ELEVATIONS

E-PLC-001 – PLC ARCHITECTURE

DAP LEGITIMATE ORIGINAL DRAWING EQUALS SUM OF ALL SCALE ACCOMPANY

STATE OF TEXAS
K. A. HARUTUNIAN
REGISTERED
PROFESSIONAL ENGINEER
2/21/2005

HARUTUNIAN ENGINEERING INCORPORATED
ENGINEERING AND ENVIRONMENTAL CONSULTANTS
305 EAST HUNTLAND DRIVE SUITE 500
AUSTIN, TEXAS 78752

REUSE OF DOCUMENTS
This document and the ideas and designs incorporated herein as an instrument of professional service has been developed, designed and prepared by Harutunian Engineering, Inc. and is not to be used, in whole or part, for any other project without the written authorization of Water District No. 10 and Harutunian Engineering, Inc. © 2005

DESIGNED BY HEI
DRAWN BY HEI
CHECKED BY HEI
SUBMITTED DATE FEBRUARY 2005
SCALE NONE

TRAVIS COUNTY WATER CONTROL & IMPROVEMENT DISTRICT NO 10
PUMP STATION NO 1

PUMP STATION GENERAL
PLC I/O WIRING SCHEMATIC
(SHEET 3 OF 3)

PROJECT # 2002-210 | SHEET 113 | DWG NO. E-PLC-004

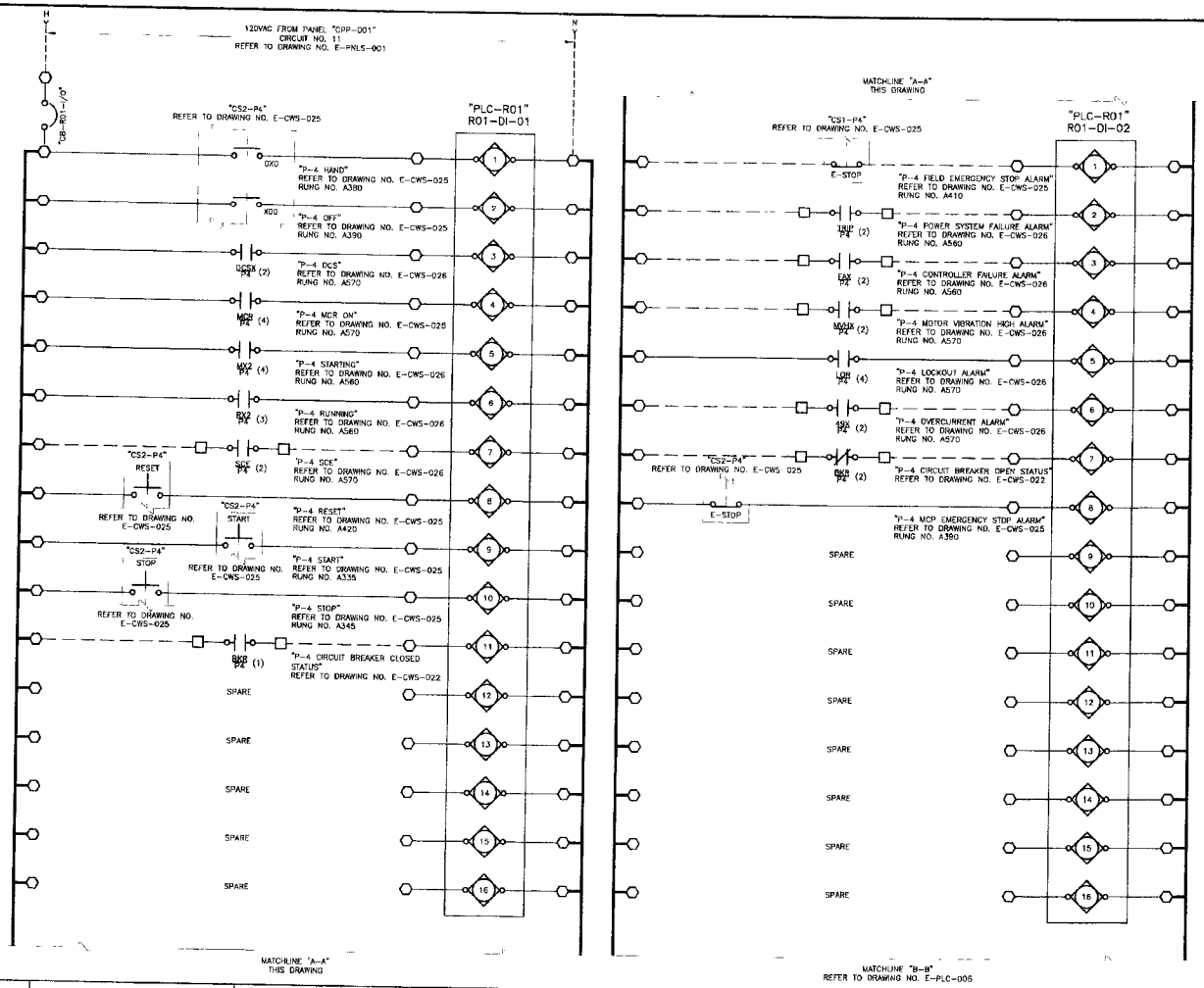


## WIRING AND TERMINAL DEVICE LEGEND:

— — INDICATES WIRING BETWEEN PANELS OR TO A FIELD MOUNTED DEVICE.

o DEVICE WIRING TERMINAL

□ PROPOSED TERMINAL BLOCK LOCATED IN PROPOSED 480V MOTOR CONTROL CENTER (MCC) "MCC-001A" OR "MCC-001B" AS APPLICABLE. ANY DEVICE SHOWN WITH DEVICE WIRING TERMINALS CONNECTED DIRECTLY TO THESE SYMBOLS WITH SOLID LINES IS ALSO LOCATED IN PROPOSED 480V MCC "MCC-001A" OR "MCC-001B" AS APPLICABLE.

⬡ PROPOSED TERMINAL BLOCK LOCATED IN PROPOSED MAIN CONTROL PANEL "MCP-001" ANY DEVICE SHOWN WITH DEVICE WIRING TERMINALS CONNECTED DIRECTLY TO THESE SYMBOLS WITH SOLID LINES IS ALSO LOCATED IN MAIN CONTROL PANEL "MCP-001"

## REFERENCE DRAWINGS:

E-FP-004 – EQUIPMENT ARRANGEMENT PLAN

E-CWS-022 – E-CWS-028 – PUMP CONTROL SCHEMATIC

E-CWS-042 – VALVE CONTROL SCHEMATIC

E-PNLS-001 – PANEL SCHEDULE

E-PLC-001 – PLC ARCHITECTURE

E-CWS-051 – E-CWS-052 – MCP ELEVATIONS

THIS DRAWING WAS BASED ON ORIGINAL DRAWINGS PROVIDED BY THE ARCHITECT OF RECORD

STATE OF TEXAS
K. A. HARUTUNIAN
4-24-1984
2-21-2005
REGISTERED PROFESSIONAL ENGINEER

HARUTUNIAN ENGINEERING INCORPORATED
ENGINEERING AND ENVIRONMENTAL CONSULTANTS
305 EAST HUNTLAND DRIVE SUITE 500
AUSTIN, TEXAS 78752

REUSE OF DOCUMENTS
This document and the ideas and designs incorporated herein as an instrument of professional service has been developed, designed and prepared by Harutunian Engineering, Inc. and is not to be used, in whole or part, for any other project without the written authorization of Water District No. 10 and Harutunian Engineering, Inc. © 2005

DESIGNED BY HEI
DRAWN BY HEI
CHECKED BY HEI
DATE FEBRUARY 2005
SCALE NONE

TRAVIS COUNTY WATER CONTROL & IMPROVEMENT DISTRICT NO 10
PUMP STATION NO. 1

PUMPING UNIT "P-4"
PLC I/O WIRING SCHEMATIC
(SHEET 1 OF 3)

JOB NO. 2002-210 | SHEET 114 | DWG NO. E-PLC-005

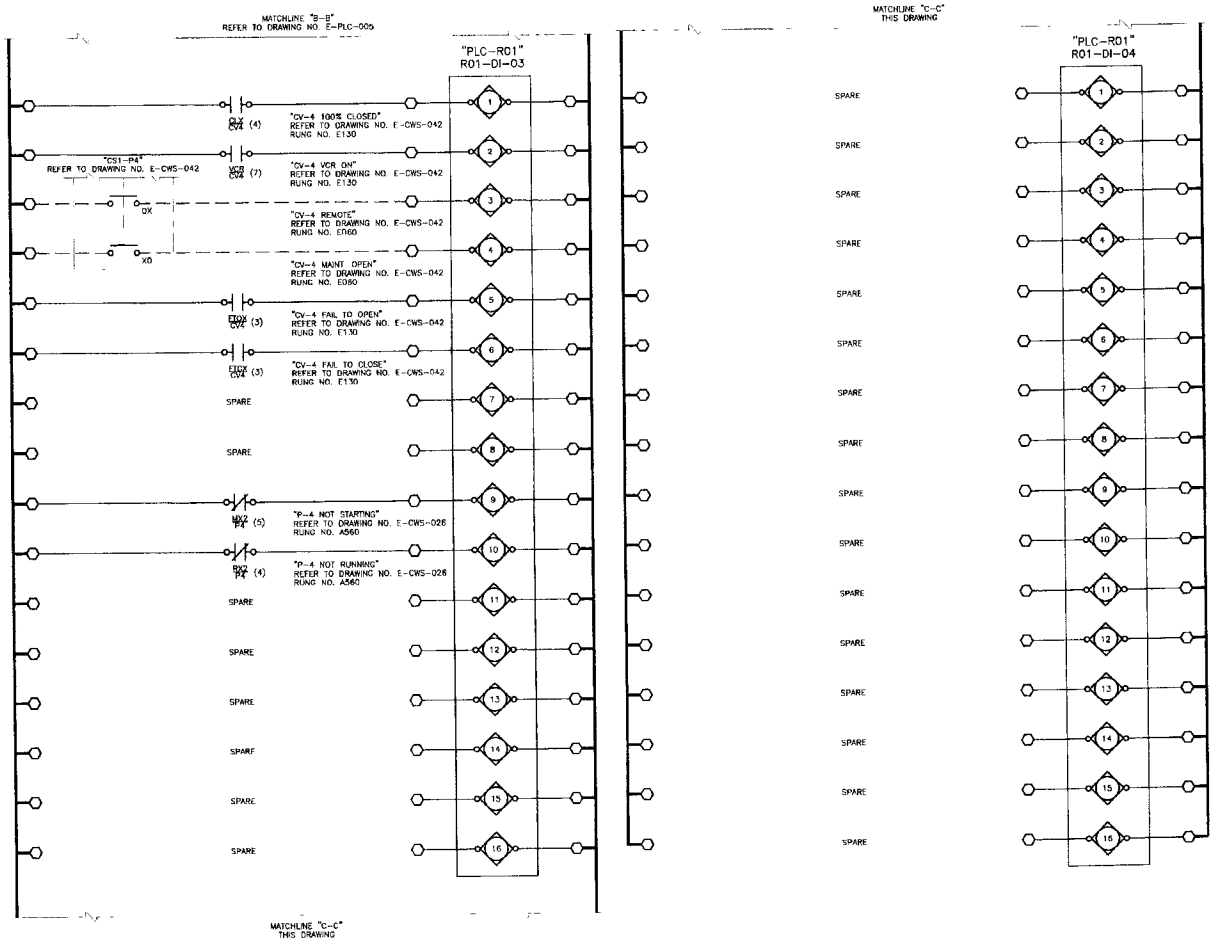


## WIRING AND TERMINAL DEVICE LEGEND:

— — INDICATES WIRING BETWEEN PANELS OR TO A FIELD MOUNTED DEVICE.

o DEVICE WIRING TERMINAL

□ PROPOSED TERMINAL BLOCK LOCATED IN PROPOSED 480V MOTOR CONTROL CENTER (MCC) "MCC-001A" OR "MCC-001B", AS APPLICABLE. ANY DEVICE SHOWN WITH DEVICE WIRING TERMINALS CONNECTED DIRECTLY TO THESE SYMBOLS WITH SOLID LINES IS ALSO LOCATED IN PROPOSED 480V MCC "MCC-001A" OR "MCC-001B", AS APPLICABLE.

⬡ PROPOSED TERMINAL BLOCK LOCATED IN PROPOSED MAIN CONTROL PANEL "MCP-001" ANY DEVICE SHOWN WITH DEVICE WIRING TERMINALS CONNECTED DIRECTLY TO THESE SYMBOLS WITH SOLID LINES IS ALSO LOCATED IN MAIN CONTROL PANEL "MCP-001"

## REFERENCE DRAWINGS:

E-FP-004 – EQUIPMENT ARRANGEMENT PLAN

E-CWS-022 – E-CWS-026 – PUMP CONTROL SCHEMATIC

E-CWS-042 – VALVE CONTROL SCHEMATIC

E-PLC-001 – PLC ARCHITECTURE

E-CWS-051 – E-CWS-052 – MCP ELEVATIONS

BAR LENGTH ON ORIGINAL DRAWING QUALS ONE INCH ADJUST SCALE ACCORDINGLY

2/21/2005

HARUTUNIAN ENGINEERING INCORPORATED
ENGINEERING AND ENVIRONMENTAL CONSULTANTS
305 EAST HUNTLAND DRIVE SUITE 500
AUSTIN, TEXAS 78752

REUSE OF DOCUMENTS
This document and the ideas and designs incorporated herein as an instrument of professional service has been developed, designed and prepared by Harutunian Engineering, Inc. and is not to be used, in whole or part, for any other project without the written authorization of Water District No. 10 and Harutunian Engineering, Inc. © 2005

HEI
HEI
FEBRUARY 2005
NONE

TRAVIS COUNTY WATER CONTROL & IMPROVEMENT DISTRICT NO 10
PUMP STATION NO 1

PUMPING UNIT "P-4"
PLC I/O WIRING SCHEMATIC
(SHEET 2 OF 3)

PROJECT 2002-210 | SHEET 115 | DWG NO. E-PLC-006

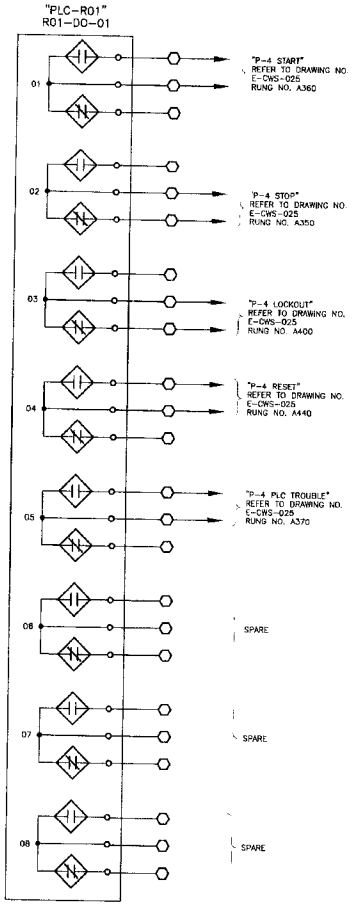


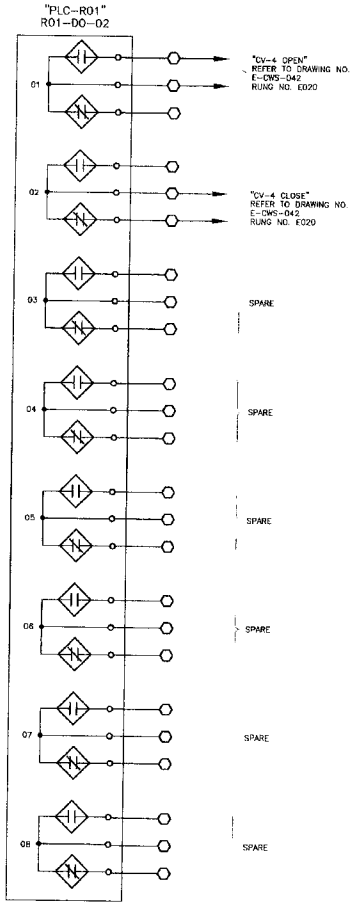


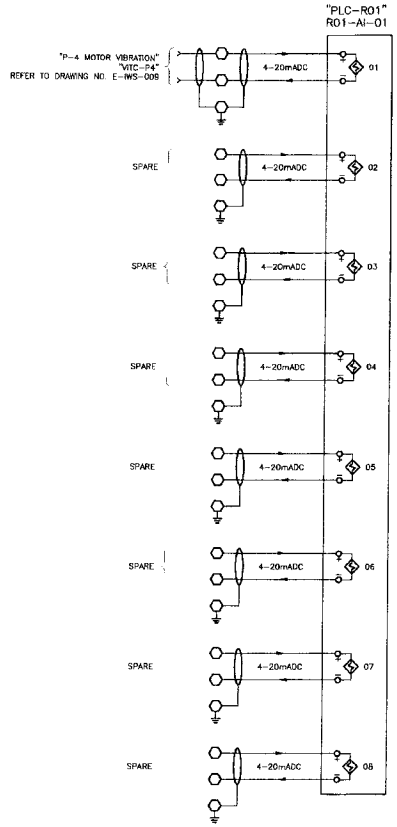


## WIRING AND TERMINAL DEVICE LEGEND:

- — — INDICATES WIRING BETWEEN PANELS OR TO A FIELD MOUNTED DEVICE.
- ○ DEVICE WIRING TERMINAL
- □ PROPOSED TERMINAL BLOCK LOCATED IN PROPOSED 480V MOTOR CONTROL CENTER (MCC) "MCC-001A" OR "MCC-001B", AS APPLICABLE. ANY DEVICE SHOWN WITH DEVICE WIRING TERMINALS CONNECTED DIRECTLY TO THESE SYMBOLS WITH SOLID LINES IS ALSO LOCATED IN PROPOSED 480V MCC "MCC-001A" OR "MCC-001B", AS APPLICABLE.
- ⬡ PROPOSED TERMINAL BLOCK LOCATED IN PROPOSED MAIN CONTROL PANEL "MCP-001" ANY DEVICE SHOWN WITH DEVICE WIRING TERMINALS CONNECTED DIRECTLY TO THESE SYMBOLS WITH SOLID LINES IS ALSO LOCATED IN MAIN CONTROL PANEL "MCP-001"

## REFERENCE DRAWINGS:

E-FP-004 – EQUIPMENT ARRANGEMENT PLAN

E-CWS-022 – E-CWS-026 – PUMP CONTROL SCHEMATIC

E-CWS-042 – VALVE CONTROL SCHEMATIC

E-PLC-001 – PLC ARCHITECTURE

E-CWS-051 – E-CWS-052 – MCP ELEVATIONS

BAR LENGTH ON ORIGINAL DRAWING EQUALS ONE INCH. USE TO SCALE AS APPROPRIATE

STATE OF TEXAS
HARUTUNIAN
REGISTERED
PROFESSIONAL ENGINEER
2/21/2005

HARUTUNIAN ENGINEERING INCORPORATED
ENGINEERING AND ENVIRONMENTAL CONSULTANTS
305 EAST HUNTLAND DRIVE SUITE 500
AUSTIN, TEXAS 78752

REUSE OF DOCUMENTS
This document and the ideas and designs incorporated herein as an instrument of professional service has been developed, designed and prepared by Harutunian Engineering, Inc. and is not to be used, in whole or part, for any other project without the written authorization of Water District No. 10 and Harutunian Engineering, Inc. © 2005

DESIGNED BY HEI
DRAWN BY HEI
APPROVED BY HEI
DATE FEBRUARY 2005
SCALE NONE

TRAVIS COUNTY WATER CONTROL & IMPROVEMENT DISTRICT NO. 10
PUMP STATION NO. 1

PUMPING UNIT "P-4"
PLC I/O WIRING SCHEMATIC
(SHEET 3 OF 3)

JOB NO. 2002-210 | SHEET 116 | DWG NO. E-PLC-007

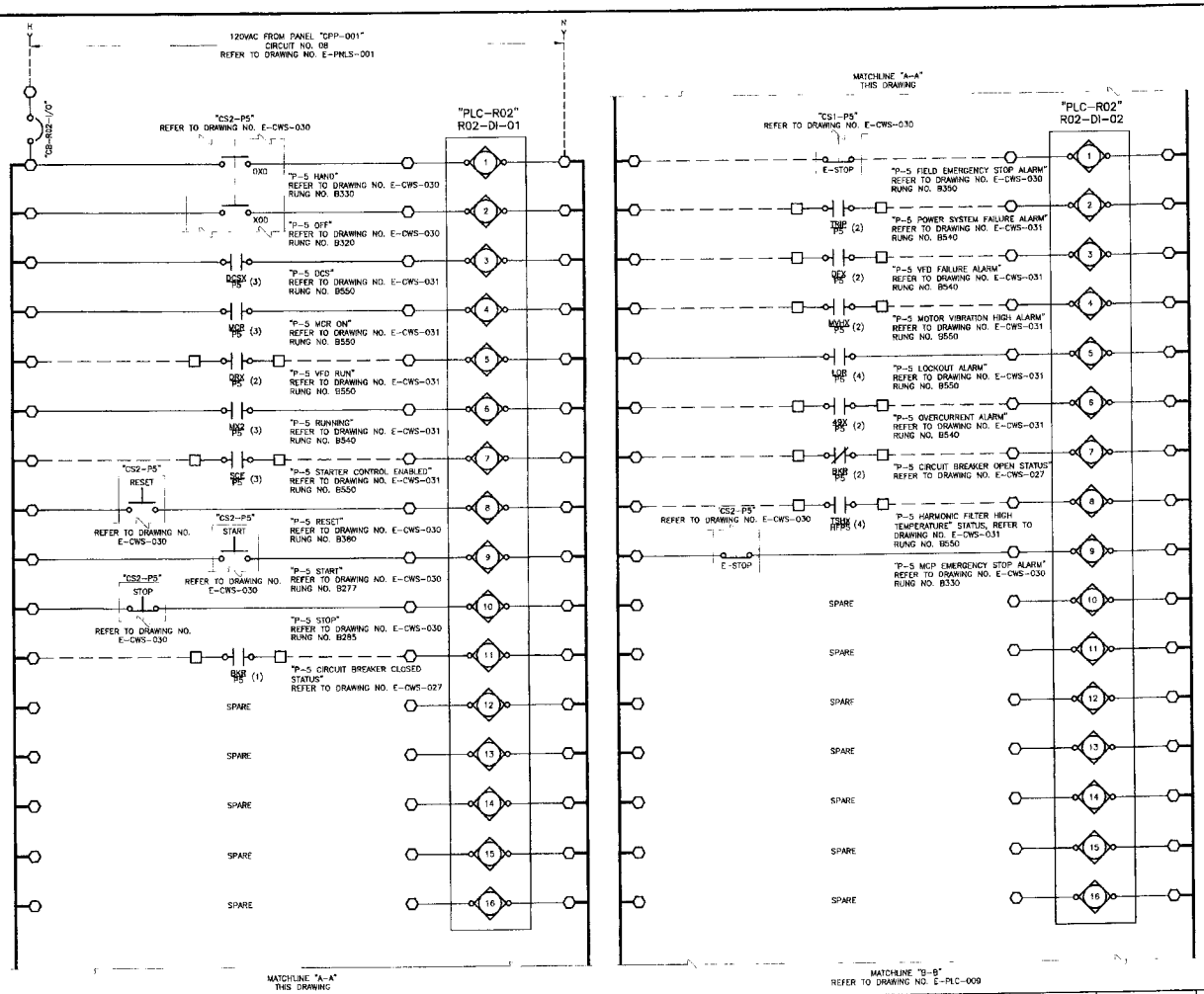


## WIRING AND TERMINAL DEVICE LEGEND:

— — INDICATES WIRING BETWEEN PANELS OR TO A FIELD MOUNTED DEVICE.

○ DEVICE WIRING TERMINAL

□ PROPOSED TERMINAL BLOCK LOCATED IN PROPOSED 480V MOTOR CONTROL CENTER (MCC) "MCC-001A" OR "MCC-001B", AS APPLICABLE. ANY DEVICE SHOWN WITH DEVICE WIRING TERMINALS CONNECTED DIRECTLY TO THESE SYMBOLS WITH SOLID LINES IS ALSO LOCATED IN PROPOSED 480V MCC "MCC-001A" OR "MCC-001B", AS APPLICABLE.

⬡ PROPOSED TERMINAL BLOCK LOCATED IN PROPOSED MAIN CONTROL PANEL "MCP-001" ANY DEVICE SHOWN WITH DEVICE WIRING TERMINALS CONNECTED DIRECTLY TO THESE SYMBOLS WITH SOLID LINES IS ALSO LOCATED IN MAIN CONTROL PANEL "MCP-001"

## REFERENCE DRAWINGS:

E-FP-004 – EQUIPMENT ARRANGEMENT PLAN

E-CWS-027 – E-CWS-031 – PUMP CONTROL SCHEMATIC

E-CWS-044 – VALVE CONTROL SCHEMATIC

E-PNLS-001 – PANEL SCHEDULE

E-PLC-001 – PLC ARCHITECTURE

E-CWS-051 – E-CWS-052 – MCP ELEVATIONS

2/21/2005

HARUTUNIAN ENGINEERING INCORPORATED
ENGINEERING AND ENVIRONMENTAL CONSULTANTS
305 EAST HUNTLAND DRIVE SUITE 500
AUSTIN, TEXAS 78752

REUSE OF DOCUMENTS
This document and the ideas and designs incorporated herein as an instrument of professional service has been developed, designed and prepared by Harutunian Engineering, Inc. and is not to be used, in whole or part, for any other project without the written authorization of Water District No. 10 and Harutunian Engineering, Inc. © 2005

HEI
HEI
HEI
FEBRUARY 2005
NONE

TRAVIS COUNTY WATER CONTROL & IMPROVEMENT DISTRICT NO 10
PUMP STATION NO 1

PUMPING UNIT "P-5"
PLC I/O WIRING SCHEMATIC
(SHEET 1 OF 4)

2002-210 | SHEET 117 | E-PLC-008

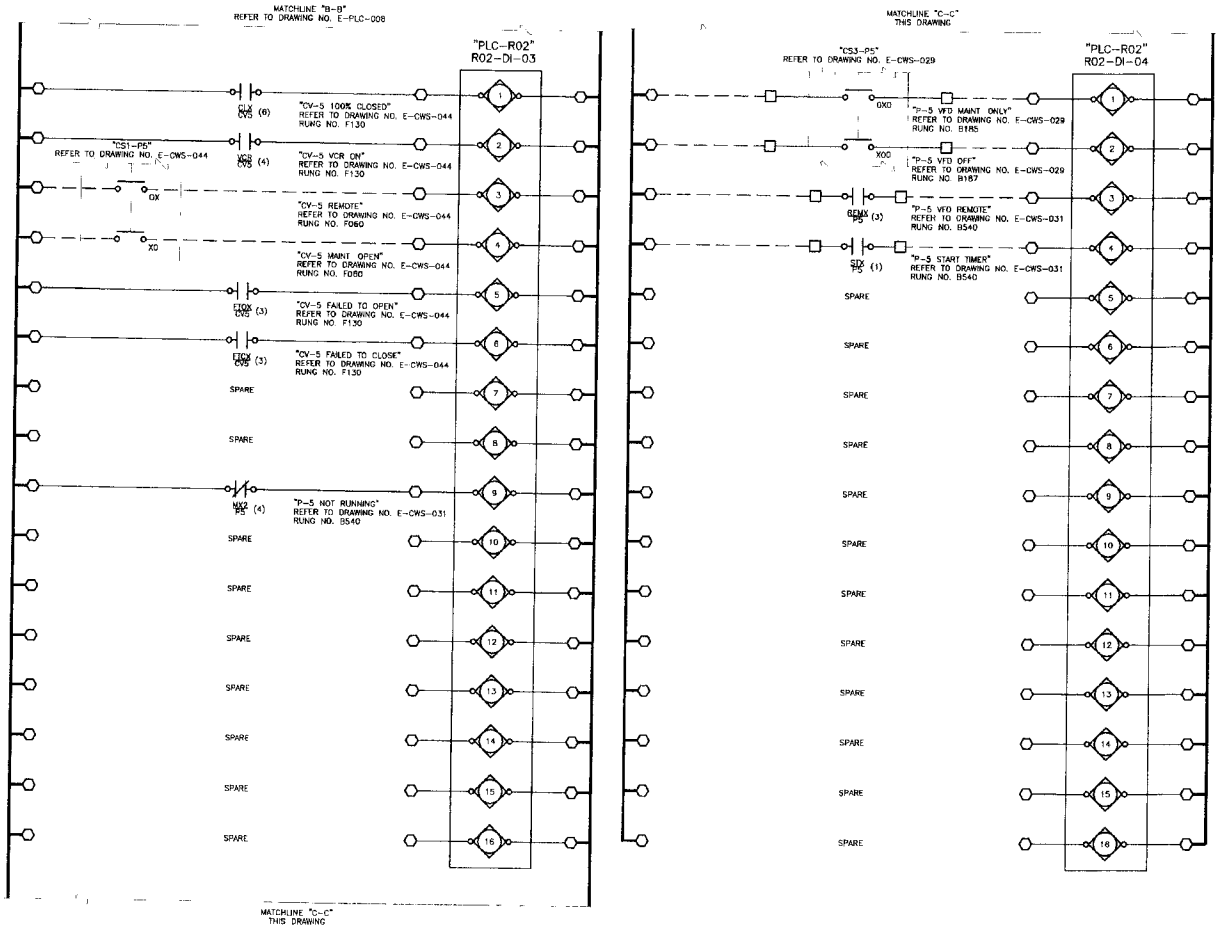


## WIRING AND TERMINAL DEVICE LEGEND:

— — INDICATES WIRING BETWEEN PANELS OR TO A FIELD MOUNTED DEVICE.

○ DEVICE WIRING TERMINAL

□ PROPOSED TERMINAL BLOCK LOCATED IN PROPOSED 480V MOTOR CONTROL CENTER (MCC) "MCC-001A" OR "MCC-001B", AS APPLICABLE. ANY DEVICE SHOWN WITH DEVICE WIRING TERMINALS CONNECTED DIRECTLY TO THESE SYMBOLS WITH SOLID LINES IS ALSO LOCATED IN PROPOSED 480V MCC "MCC-001A" OR "MCC-001B", AS APPLICABLE.

⬡ PROPOSED TERMINAL BLOCK LOCATED IN PROPOSED MAIN CONTROL PANEL "MCP-001" ANY DEVICE SHOWN WITH DEVICE WIRING TERMINALS CONNECTED DIRECTLY TO THESE SYMBOLS WITH SOLID LINES IS ALSO LOCATED IN MAIN CONTROL PANEL "MCP-001"

## REFERENCE DRAWINGS:

E-FP-004 – EQUIPMENT ARRANGEMENT PLAN

E-CWS-027 – E-CWS-031 – PUMP CONTROL SCHEMATIC

E-CWS-044 – VALVE CONTROL SCHEMATIC

E-PLC-001 – PLC ARCHITECTURE

E-CWS-051 – E-CWS-052 – MCP ELEVATIONS

BAR EQUIV ON ORIGINAL DRAWING EQUAL ONE INCH. ADJUST SCALE ACCORDINGLY

2/21/2005

HARUTUNIAN ENGINEERING INCORPORATED

ENGINEERING AND ENVIRONMENTAL CONSULTANTS
305 EAST HUNTLAND DRIVE SUITE 800
AUSTIN, TEXAS 78752

REUSE OF DOCUMENTS
This document and the ideas and designs incorporated herein as an instrument of professional service has been developed, designed and prepared by Harutunian Engineering, Inc. and is not to be used, in whole or part, for any other project without the written authorization of Water District No. 10 and Harutunian Engineering, Inc. © 2005

HEI
HEI
HEI
FEBRUARY 2005
NONE

TRAVIS COUNTY WATER CONTROL & IMPROVEMENT DISTRICT NO. 10
PUMP STATION NO. 1

PUMPING UNIT "P-5"
PLC I/O WIRING SCHEMATIC
(SHEET 2 OF 4)

JOB NO. 2002-210 | SHEET 118 | DWG NO. E-PLC-009

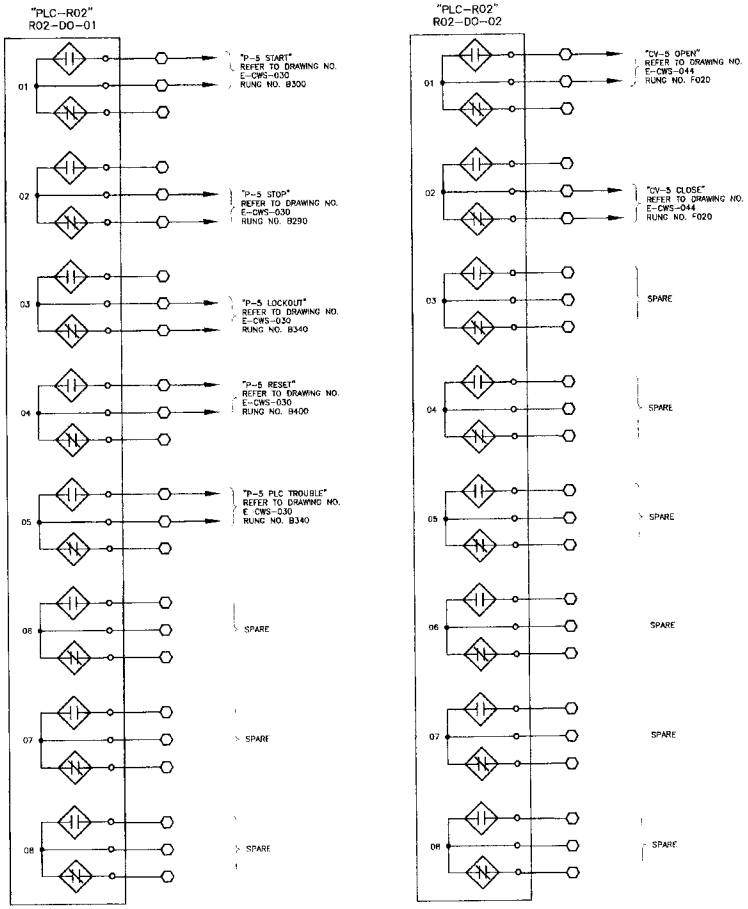


## WIRING AND TERMINAL DEVICE LEGEND:

— — INDICATES WIRING BETWEEN PANELS OR TO A FIELD MOUNTED DEVICE.

○ DEVICE WIRING TERMINAL

□ PROPOSED TERMINAL BLOCK LOCATED IN PROPOSED 480V MOTOR CONTROL CENTER (MCC) "MCC-001A" OR "MCC-001B", AS APPLICABLE. ANY DEVICE SHOWN WITH DEVICE WIRING TERMINALS CONNECTED DIRECTLY TO THESE SYMBOLS WITH SOLID LINES IS ALSO LOCATED IN PROPOSED 480V MCC "MCC-001A" OR "MCC-001B", AS APPLICABLE.

⬡ PROPOSED TERMINAL BLOCK LOCATED IN PROPOSED MAIN CONTROL PANEL "MCP-001" ANY DEVICE SHOWN WITH DEVICE WIRING TERMINALS CONNECTED DIRECTLY TO THESE SYMBOLS WITH SOLID LINES IS ALSO LOCATED IN MAIN CONTROL PANEL "MCP-001"

## REFERENCE DRAWINGS:

E-FP-004 – EQUIPMENT ARRANGEMENT PLAN

E-CWS-027 – E-CWS-031 – PUMP CONTROL SCHEMATIC

E-CWS-044 – VALVE CONTROL SCHEMATIC

E-PLC-001 – PLC ARCHITECTURE

E-CWS-051 – E-CWS-052 – MCP ELEVATIONS

BAR LENGTH ON ORIGINAL DRAWING EQUALS ONE INCH. ADJUST SCALE ACCORDINGLY

STATE OF TEXAS REGISTERED PROFESSIONAL ENGINEER 2/21/2005

HARUTUNIAN ENGINEERING INCORPORATED

ENGINEERING AND ENVIRONMENTAL CONSULTANTS
305 EAST HUNTLAND DRIVE SUITE 300
AUSTIN, TEXAS 78752

REUSE OF DOCUMENTS

This document and the ideas and designs incorporated herein as an instrument of professional service has been developed, designed and prepared by Harutunian Engineering, Inc. and is not to be used, in whole or part, for any other project without the written authorization of Water District No. 10 and Harutunian Engineering, Inc. © 2005

| | |
|---|---|
| DESIGNED BY | HEI |
| DRAWN BY | HEI |
| CHECKED BY | HEI |
| SUBMITTED DATE | FEBRUARY 2005 |
| SCALE | NONE |

TRAVIS COUNTY WATER CONTROL & IMPROVEMENT DISTRICT NO 10
PUMP STATION NO. 1

PUMPING UNIT "P-5"
PLC I/O WIRING SCHEMATIC
(SHEET 3 OF 4)

PROJECT 2002-210 | SHEET 119 | DWG NO. E-PLC-010

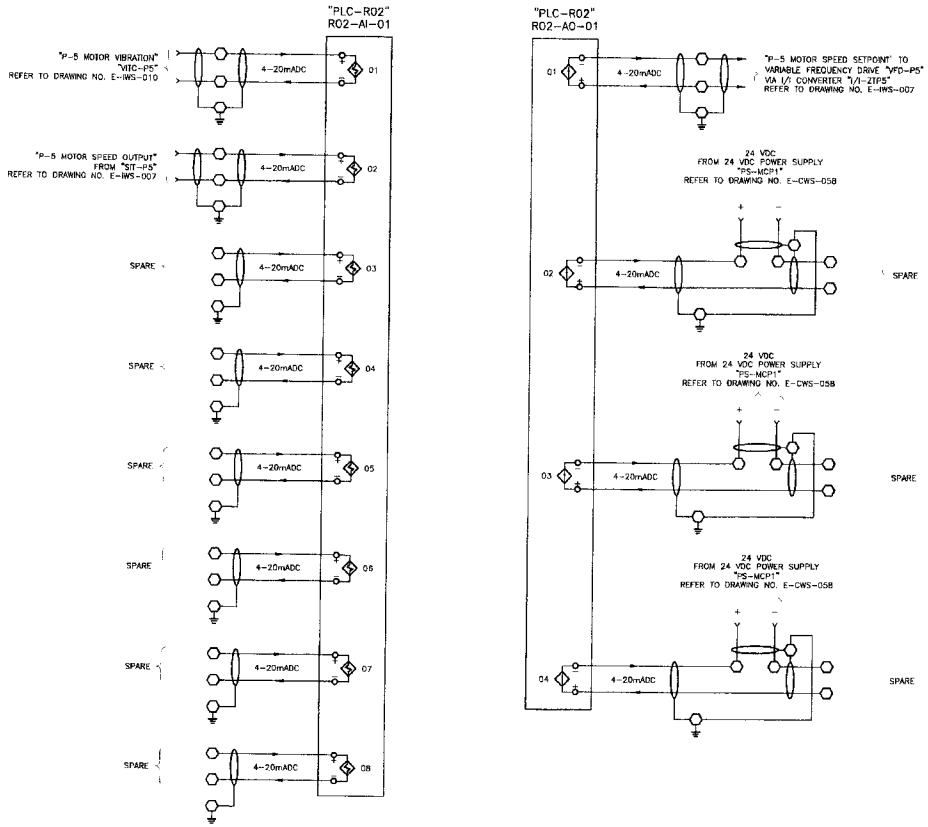


## WIRING AND TERMINAL DEVICE LEGEND:

— — INDICATES WIRING BETWEEN PANELS OR TO A FIELD MOUNTED DEVICE.

o DEVICE WIRING TERMINAL

□ PROPOSED TERMINAL BLOCK LOCATED IN PROPOSED 480V MOTOR CONTROL CENTER (MCC) "MCC-001A" OR "MCC-001B", AS APPLICABLE. ANY DEVICE SHOWN WITH DEVICE WIRING TERMINALS CONNECTED DIRECTLY TO THESE SYMBOLS WITH SOLID LINES IS ALSO LOCATED IN PROPOSED 480V MCC "MCC-001A" OR "MCC-001B" AS APPLICABLE.

○ PROPOSED TERMINAL BLOCK LOCATED IN PROPOSED MAIN CONTROL PANEL "MCP-001" ANY DEVICE SHOWN WITH DEVICE WIRING TERMINALS CONNECTED DIRECTLY TO THESE SYMBOLS WITH SOLID LINES IS ALSO LOCATED IN MAIN CONTROL PANEL "MCP-001"

## REFERENCE DRAWINGS:

E-FP-004 – EQUIPMENT LOCATION PLAN

E-CWS-027 – E-CWS-031 – PUMP CONTROL SCHEMATIC

E-CWS-044 – VALVE CONTROL SCHEMATIC

E-PLC-001 – PLC ARCHITECTURE

E-CWS-051 – E-CWS-052 – MCP ELEVATIONS

HARUTUNIAN ENGINEERING INCORPORATED
ENGINEERING AND ENVIRONMENTAL CONSULTANTS
305 EAST HUNTLAND DRIVE SUITE 500
AUSTIN, TEXAS 78752

REUSE OF DOCUMENTS
This document and the ideas and designs incorporated herein as an instrument of professional service has been developed, designed and prepared by Harutunian Engineering, Inc. and is not to be used, in whole or part, for any other project without the written authorization of Water District No. 10 and Harutunian Engineering, Inc. © 2005

HEI
HEI
HEI
FEBRUARY 2005
NONE

TRAVIS COUNTY WATER CONTROL & IMPROVEMENT DISTRICT NO 10
PUMP STATION NO. 1

PUMPING UNIT "P-5"
PLC I/O WIRING SCHEMATIC
(SHEET 4 OF 4)

2002-210 | SHEET 120 | E-PLC-011

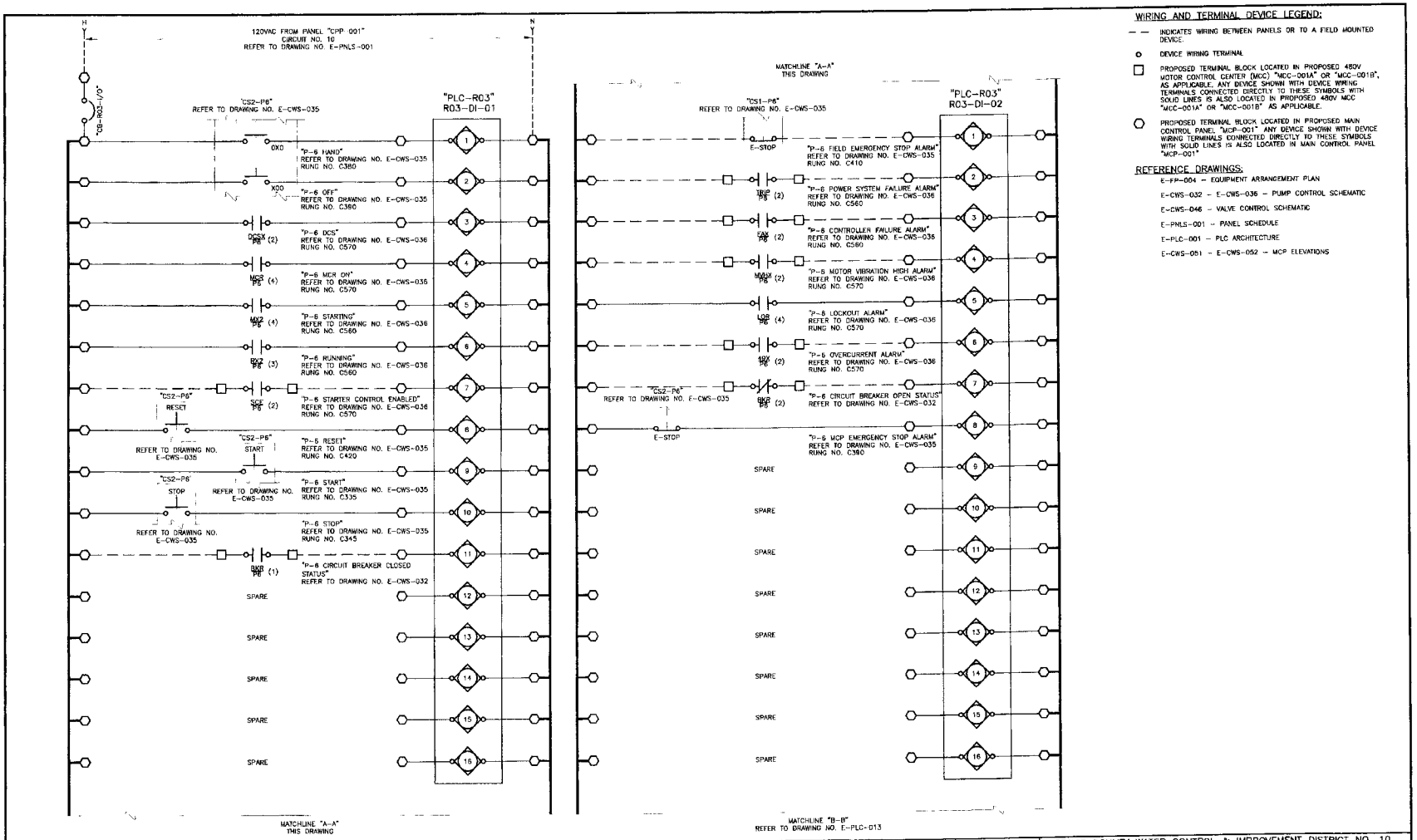


## WIRING AND TERMINAL DEVICE LEGEND:

- — — INDICATES WIRING BETWEEN PANELS OR TO A FIELD MOUNTED DEVICE.
- ○ DEVICE WIRING TERMINAL
- □ PROPOSED TERMINAL BLOCK LOCATED IN PROPOSED 480V MOTOR CONTROL CENTER (MCC) "MCC-001A" OR "MCC-001B", AS APPLICABLE. ANY DEVICE SHOWN WITH DEVICE WIRING TERMINALS CONNECTED DIRECTLY TO THESE SYMBOLS WITH SOLID LINES IS ALSO LOCATED IN PROPOSED 480V MCC "MCC-001A" OR "MCC-001B" AS APPLICABLE.
- ⬡ PROPOSED TERMINAL BLOCK LOCATED IN PROPOSED MAIN CONTROL PANEL "MCP-001" ANY DEVICE SHOWN WITH DEVICE WIRING TERMINALS CONNECTED DIRECTLY TO THESE SYMBOLS WITH SOLID LINES IS ALSO LOCATED IN MAIN CONTROL PANEL "MCP-001"

## REFERENCE DRAWINGS:

E-FP-004 – EQUIPMENT ARRANGEMENT PLAN
E-CWS-032 – E-CWS-036 – PUMP CONTROL SCHEMATIC
E-CWS-046 – VALVE CONTROL SCHEMATIC
E-PNLS-001 – PANEL SCHEDULE
E-PLC-001 – PLC ARCHITECTURE
E-CWS-051 – E-CWS-052 – MCP ELEVATIONS

SEE ELEVATION OF PUMP POWER EQUIPMENT ADJUST SCALE ACCORDINGLY

2/21/2005

HARUTUNIAN ENGINEERING INCORPORATED
ENGINEERING AND ENVIRONMENTAL CONSULTANTS
305 EAST HUNTLAND DRIVE SUITE 500
AUSTIN, TEXAS 78752

REUSE OF DOCUMENTS
This document and the ideas and designs incorporated herein as an instrument of professional service has been developed, designed and prepared by Harutunian Engineering, Inc. and is not to be used, in whole or part, for any other project without the written authorization of Water District No. 10 and Harutunian Engineering, Inc. © 2005

HEI
HEI
HEI
FEBRUARY 2005
NONE

TRAVIS COUNTY WATER CONTROL & IMPROVEMENT DISTRICT NO 10
PUMP STATION NO 1

PUMPING UNIT "P-6"
PLC I/O WIRING SCHEMATIC
(SHEET 1 OF 3)

2002-210 | SHEET 121 | E-PLC-012

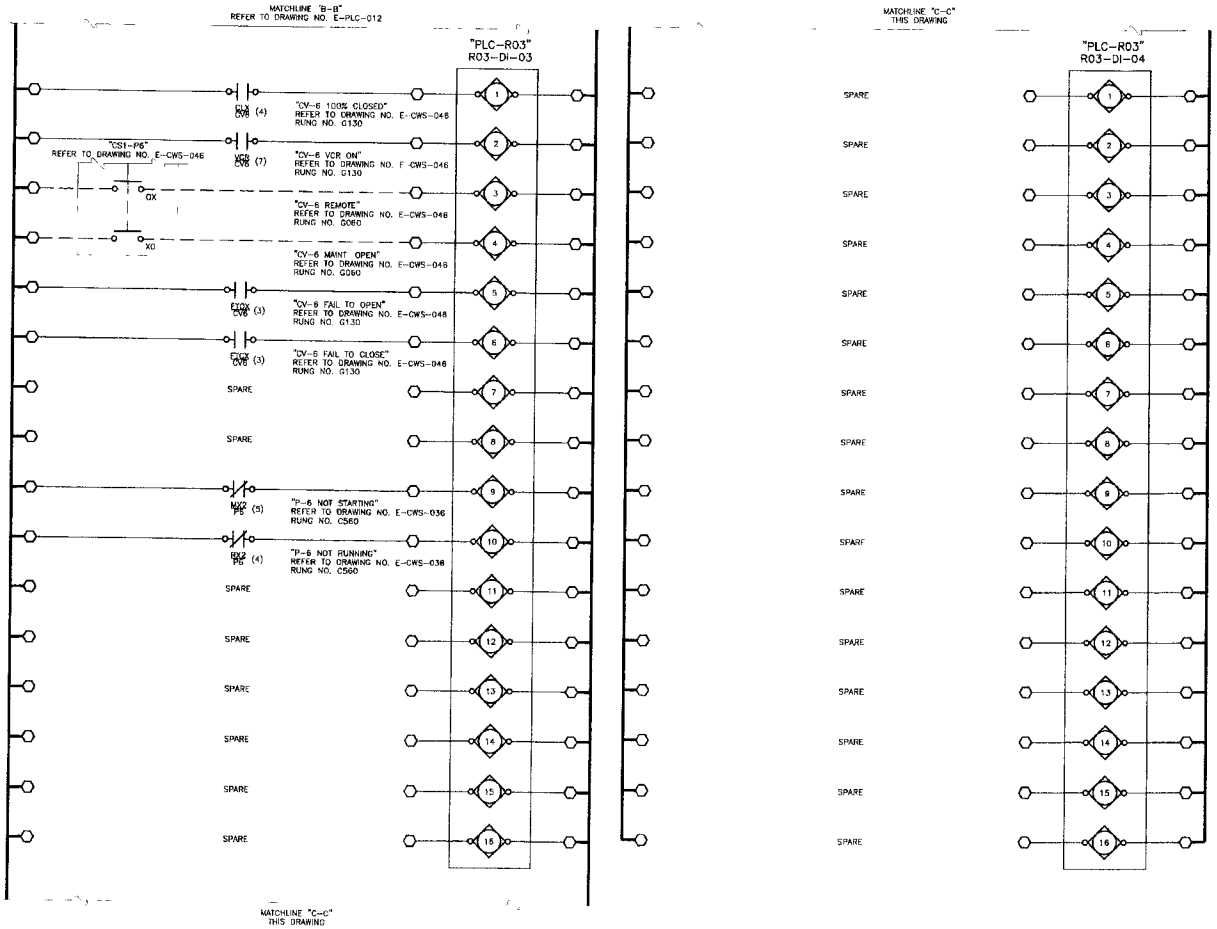


## WIRING AND TERMINAL DEVICE LEGEND.

— — INDICATES WIRING BETWEEN PANELS OR TO A FIELD MOUNTED DEVICE.

○ DEVICE WIRING TERMINAL

□ PROPOSED TERMINAL BLOCK LOCATED IN PROPOSED 480V MOTOR CONTROL CENTER (MCC) "MCC-001A" OR "MCC-001B", AS APPLICABLE. ANY DEVICE SHOWN WITH DEVICE WIRING TERMINALS CONNECTED DIRECTLY TO THESE SYMBOLS WITH SOLID LINES IS ALSO LOCATED IN PROPOSED 480V MCC "MCC-001A" OR "MCC-001B", AS APPLICABLE

⬡ PROPOSED TERMINAL BLOCK LOCATED IN PROPOSED MAIN CONTROL PANEL "MCP-001". ANY DEVICE SHOWN WITH DEVICE WIRING TERMINALS CONNECTED DIRECTLY TO THESE SYMBOLS WITH SOLID LINES IS ALSO LOCATED IN MAIN CONTROL PANEL "MCP-001"

## REFERENCE DRAWINGS:

E-FP-004 – EQUIPMENT ARRANGEMENT PLAN

E-CWS-032 – E-CWS-036 – PUMP CONTROL SCHEMATIC

E-CWS-046 – VALVE CONTROL SCHEMATIC

E-PLC-001 – PLC ARCHITECTURE

E-CWS-051 – E-CWS-052 – MCP ELEVATIONS

BAR IS 50 MM ON ORIGINAL DRAWING. IF NOT ADJUST SCALE ACCORDINGLY

STATE OF TEXAS
KARAPET BEDROS HARUTUNIAN
REGISTERED
PROFESSIONAL ENGINEER
2/21/2005

HARUTUNIAN ENGINEERING INCORPORATED
ENGINEERING AND ENVIRONMENTAL CONSULTANTS
305 EAST HUNTLAND DRIVE SUITE 500
AUSTIN, TEXAS 78752

REUSE OF DOCUMENTS
This document and the ideas and designs incorporated herein as an instrument of professional service has been developed, designed and prepared by Harutunian Engineering, Inc. and is not to be used, in whole or part, for any other project without the written authorization of Water District No. 10 and Harutunian Engineering, Inc. © 2005

HEI
HEI
HEI
FEBRUARY 2005
NONE

TRAVIS COUNTY WATER CONTROL & IMPROVEMENT DISTRICT NO 10
PUMP STATION NO 1

PUMPING UNIT "P-6"
PLC I/O WIRING SCHEMATIC
(SHEET 2 OF 3)

JOB NO 2002-210 | SHEET 122 | DRAWING E-PLC-013

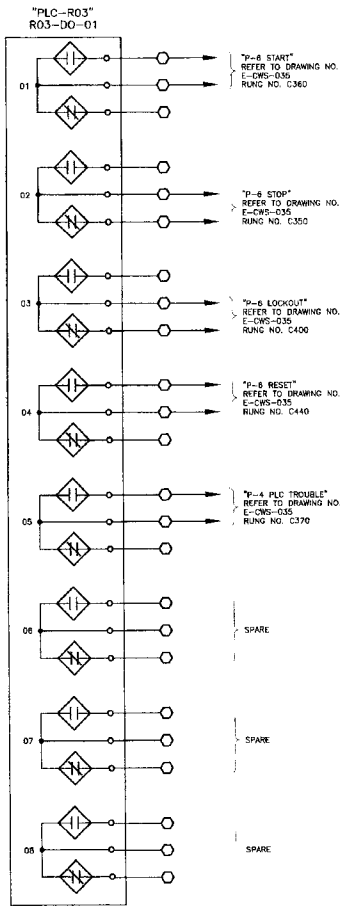


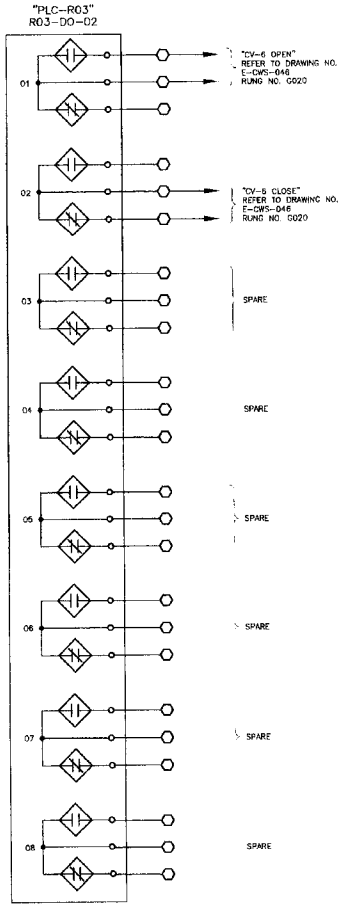


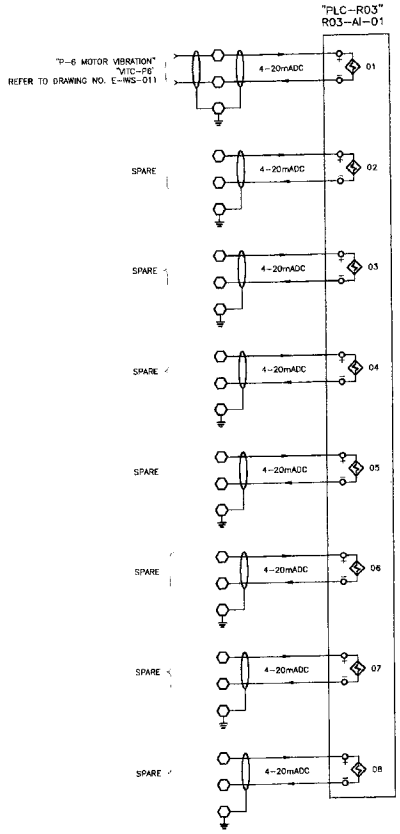


## WIRING AND TERMINAL DEVICE LEGEND.

- — — INDICATES WIRING BETWEEN PANELS OR TO A FIELD MOUNTED DEVICE.
- ○ DEVICE WIRING TERMINAL
- □ PROPOSED TERMINAL BLOCK LOCATED IN PROPOSED 480V MOTOR CONTROL CENTER (MCC) "MCC-001A" OR "MCC-001B", AS APPLICABLE. ANY DEVICE SHOWN WITH DEVICE WIRING TERMINALS CONNECTED DIRECTLY TO THESE SYMBOLS WITH SOLID LINES IS ALSO LOCATED IN PROPOSED 480V MCC "MCC-001A" OR "MCC-001B", AS APPLICABLE.
- ⬡ PROPOSED TERMINAL BLOCK LOCATED IN PROPOSED MAIN CONTROL PANEL "MCP-001" ANY DEVICE SHOWN WITH DEVICE WIRING TERMINALS CONNECTED DIRECTLY TO THESE SYMBOLS WITH SOLID LINES IS ALSO LOCATED IN MAIN CONTROL PANEL "MCP-001"

## REFERENCE DRAWINGS.

E-FP-004 – EQUIPMENT ARRANGEMENT PLAN

E-CWS-032 – E-CWS-036 – PUMP CONTROL SCHEMATIC

E-CWS-046 – VALVE CONTROL SCHEMATIC

E-PLC-001 – PLC ARCHITECTURE

E-CWS-051 – E-CWS-052 – MCP ELEVATIONS

BAR LENGTH IN ORIGINAL DRAWING EQUALS ONE INCH ADJUST SCALE AS REQUIRED

K Abbentuna
STATE OF TEXAS
KEVIN ABBENTUNA
REGISTERED
PROFESSIONAL ENGINEER
2/21/2005

HARUTUNIAN ENGINEERING INCORPORATED
ENGINEERING AND ENVIRONMENTAL CONSULTANTS
305 EAST HUNTLAND DRIVE SUITE 200
AUSTIN, TEXAS 78752

REUSE OF DOCUMENTS
This document and the ideas and designs incorporated herein as an instrument of professional service has been developed, designed and prepared by Harutunian Engineering, Inc. and is not to be used, in whole or part, for any other project without the written authorization of Water District No. 10 and Harutunian Engineering, Inc. © 2001

| | |
|---|---|
| DESIGNED | HEI |
| DRAWN | HEI |
| REVIEWED | HEI |
| DATE | FEBRUARY 2005 |
| SCALE | NONE |

TRAVIS COUNTY WATER CONTROL & IMPROVEMENT DISTRICT NO 10
PUMP STATION NO. 1

PUMPING UNIT "P-6"
PLC I/O WIRING SCHEMATIC
(SHEET 3 OF 3)

| | | | |
|---|---|---|---|
| JOB NO. | 2002-210 | SHEET 123 | DWG NO. E-PLC-014 |

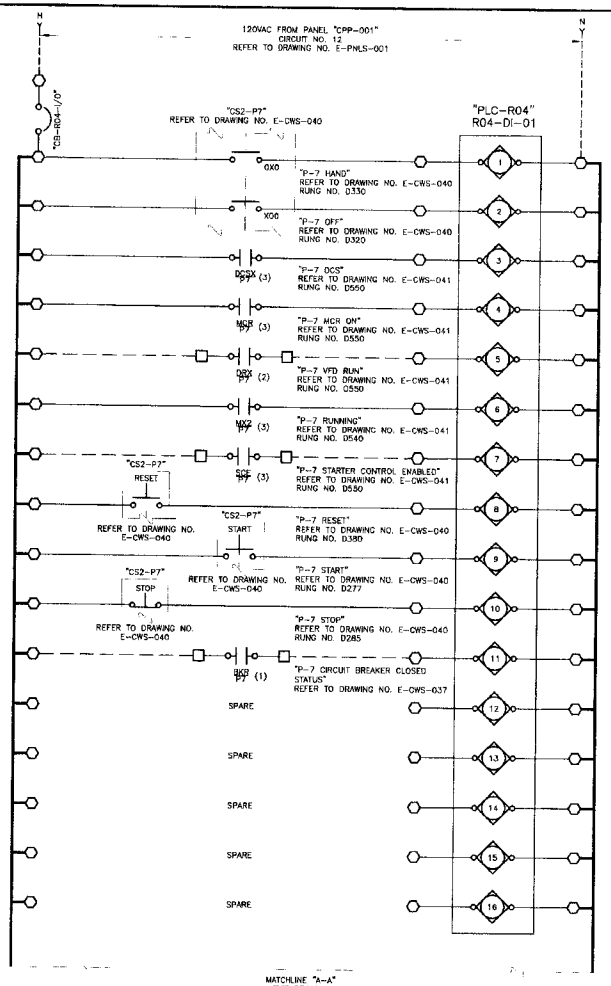


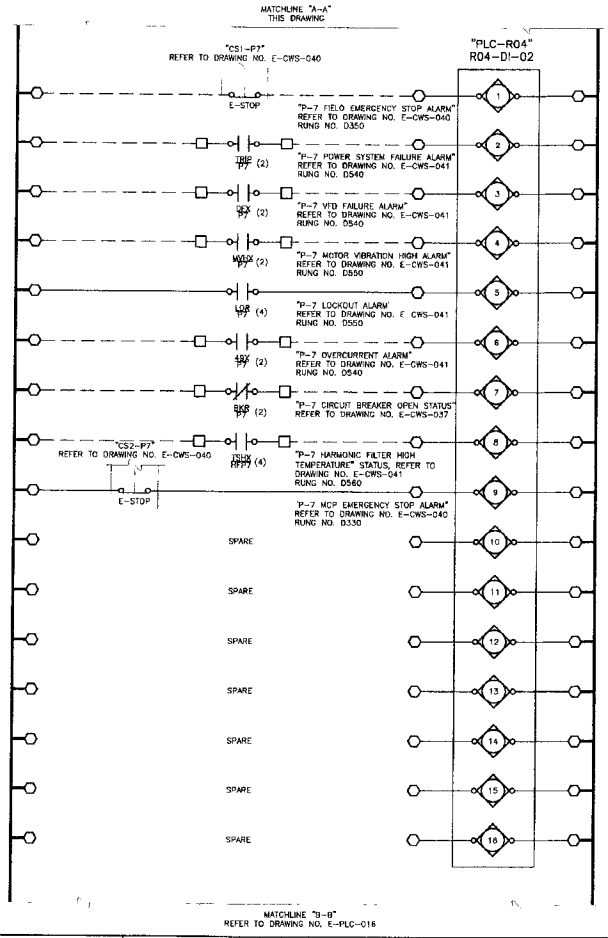


## WIRING AND TERMINAL DEVICE LEGEND:

- — — INDICATES WIRING BETWEEN PANELS OR TO A FIELD MOUNTED DEVICE.
- ○ DEVICE WIRING TERMINAL
- □ PROPOSED TERMINAL BLOCK LOCATED IN PROPOSED 480V MOTOR CONTROL CENTER (MCC) "MCC-001A" OR "MCC-001B" AS APPLICABLE. ANY DEVICE SHOWN WITH DEVICE WIRING TERMINALS CONNECTED DIRECTLY TO THESE SYMBOLS WITH SOLID LINES IS ALSO LOCATED IN PROPOSED 480V MCC "MCC-001A" OR "MCC-001B" AS APPLICABLE.
- ⬡ PROPOSED TERMINAL BLOCK LOCATED IN PROPOSED MAIN CONTROL PANEL "MCP-001". ANY DEVICE SHOWN WITH DEVICE WIRING TERMINALS CONNECTED DIRECTLY TO THESE SYMBOLS WITH SOLID LINES IS ALSO LOCATED IN MAIN CONTROL PANEL "MCP-001"

## REFERENCE DRAWINGS:

- E-FP-004 – EQUIPMENT ARRANGEMENT PLAN
- E-CWS-037 – E-CWS-041 – PUMP CONTROL SCHEMATIC
- E-CWS-048 – VALVE CONTROL SCHEMATIC
- E-PNLS-001 – PANEL SCHEDULE
- E-PLC-001 – PLC ARCHITECTURE
- E-CWS-051 – E-CWS-052 – MCP ELEVATIONS

BAR LENGTH ON ORIGINAL DRAWING IS 1" ADJUST SCALE ACCORDINGLY

STATE OF TEXAS
REGISTERED
PROFESSIONAL ENGINEER
2/21/2005

HARUTUNIAN ENGINEERING INCORPORATED
ENGINEERING AND ENVIRONMENTAL CONSULTANTS
305 EAST HUNTLAND DRIVE SUITE 500
AUSTIN, TEXAS 78752

REUSE OF DOCUMENTS
This document and the ideas and designs incorporated herein as an instrument of professional service has been developed, designed and prepared by Harutunian Engineering, Inc. and is not to be used, in whole or part, for any other project without the written authorization of Water District No. 10 and Harutunian Engineering, Inc. © 2005

| | |
|---|---|
| DRAWN BY | HEI |
| DESIGNED BY | HEI |
| CHECKED BY | HEI |
| DATE | FEBRUARY 2005 |
| SCALE | NONE |

TRAVIS COUNTY WATER CONTROL & IMPROVEMENT DISTRICT NO. 10
PUMP STATION NO. 1

PUMPING UNIT "P-7"
PLC I/O WIRING SCHEMATIC
(SHEET 1 OF 4)

PROJECT 2002-210 | SHEET 124 | E-PLC-015

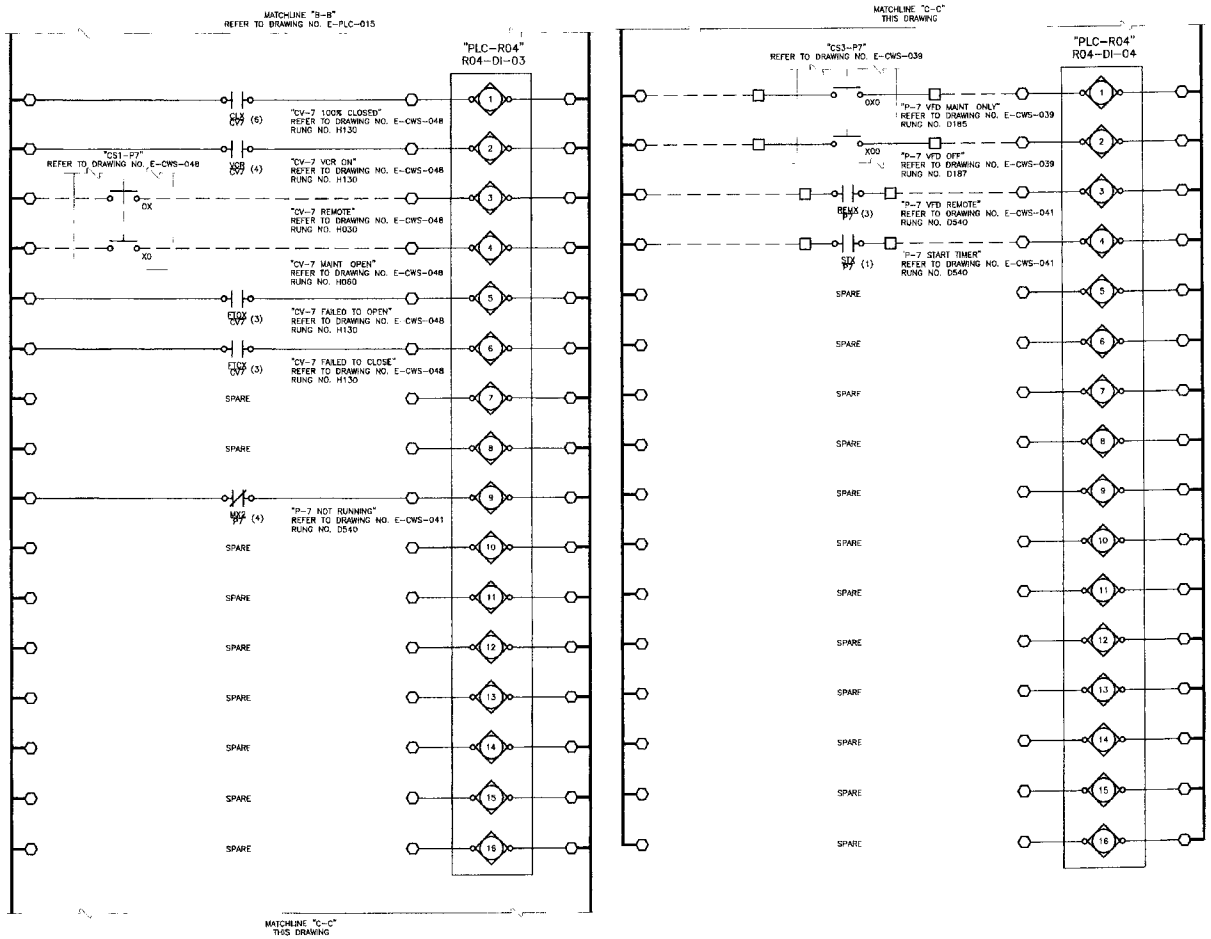


## WIRING AND TERMINAL DEVICE LEGEND:

- — — INDICATES WIRING BETWEEN PANELS OR TO A FIELD MOUNTED DEVICE.
- ○ DEVICE WIRING TERMINAL
- □ PROPOSED TERMINAL BLOCK LOCATED IN PROPOSED 480V MOTOR CONTROL CENTER (MCC) "MCC-001A" OR "MCC-001B", AS APPLICABLE. ANY DEVICE SHOWN WITH DEVICE WIRING TERMINALS CONNECTED DIRECTLY TO THESE SYMBOLS WITH SOLID LINES IS ALSO LOCATED IN PROPOSED 480V MCC "MCC-001A" OR "MCC-001B", AS APPLICABLE.
- ⬡ PROPOSED TERMINAL BLOCK LOCATED IN PROPOSED MAIN CONTROL PANEL "MCP-001" ANY DEVICE SHOWN WITH DEVICE WIRING TERMINALS CONNECTED DIRECTLY TO THESE SYMBOLS WITH SOLID LINES IS ALSO LOCATED IN MAIN CONTROL PANEL "MCP-001"

## REFERENCE DRAWINGS:

E-FP-004 – EQUIPMENT ARRANGEMENT PLAN

E-CWS-037 – E-CWS-041 – PUMP CONTROL SCHEMATIC

E-CWS-048 – VALVE CONTROL SCHEMATIC

E-PLC-001 – PLC ARCHITECTURE

E-CWS-051 – E-CWS-052 – MCP ELEVATIONS

BAR EMOT ON ORIGINAL DRAWING IF NOT ADJUST SCALE ACCORDINGLY

STATE OF TEXAS
K. A. HARUTUNIAN
#18321
REGISTERED
PROFESSIONAL ENGINEER
2/21/2005

HARUTUNIAN ENGINEERING INCORPORATED

ENGINEERING AND ENVIRONMENTAL CONSULTANTS
305 EAST HUNTLAND DRIVE SUITE 500
AUSTIN, TEXAS 78752

REUSE OF DOCUMENTS
This document and the ideas and designs incorporated herein as an instrument of professional service has been developed, designed and prepared by Harutunian Engineering, Inc. and is not to be used, in whole or part, for any other project without the written authorization of Water District No. 10 and Harutunian Engineering, Inc. © 2005

HEI
HEI
HEI
FEBRUARY 2005
NONE

TRAVIS COUNTY WATER CONTROL & IMPROVEMENT DISTRICT NO 10
PUMP STATION NO. 1

PUMPING UNIT "P-7"
PLC I/O WIRING SCHEMATIC
(SHEET 2 OF 4)

2002-210 | SHEET 125 | E-PLC-016

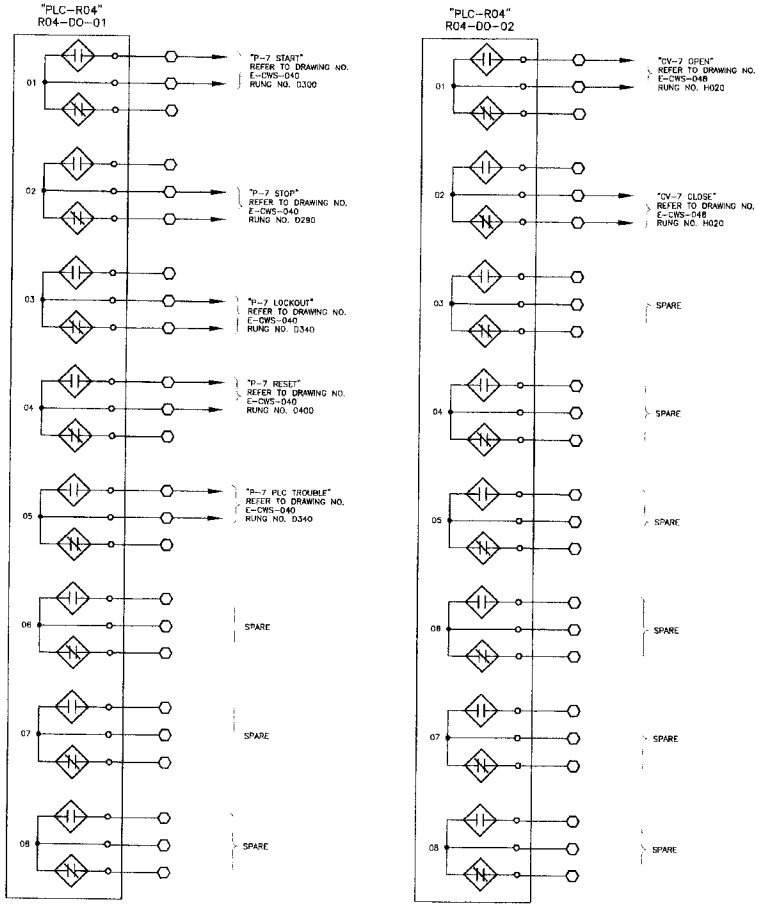


## WIRING AND TERMINAL DEVICE LEGEND:

— — INDICATES WIRING BETWEEN PANELS OR TO A FIELD MOUNTED DEVICE.

o DEVICE WIRING TERMINAL

□ PROPOSED TERMINAL BLOCK LOCATED IN PROPOSED 480V MOTOR CONTROL CENTER (MCC) "MCC-001A" OR "MCC-001B", AS APPLICABLE. ANY DEVICE SHOWN WITH DEVICE WIRING TERMINALS CONNECTED DIRECTLY TO THESE SYMBOLS WITH SOLID LINES IS ALSO LOCATED IN PROPOSED 480V MCC "MCC-001A" OR "MCC-001B", AS APPLICABLE.

⬡ PROPOSED TERMINAL BLOCK LOCATED IN PROPOSED MAIN CONTROL PANEL "MCP-001". ANY DEVICE SHOWN WITH DEVICE WIRING TERMINALS CONNECTED DIRECTLY TO THESE SYMBOLS WITH SOLID LINES IS ALSO LOCATED IN MAIN CONTROL PANEL "MCP-001"

## REFERENCE DRAWINGS:

E-FP-004 – EQUIPMENT ARRANGEMENT PLAN

E-CWS-037 – E-CWS-041 – PUMP CONTROL SCHEMATIC

E-CWS-048 – VALVE CONTROL SCHEMATIC

E-PLC-001 – PLC ARCHITECTURE

E-CWS-051 E-CWS-052 – MCP ELEVATIONS

BAR LENGTH ON ORIGINAL DRAWING IS 1" ADJUST SCALE AS ORIGINALLY

STATE OF TEXAS
K. ARHUTUNIAN
#181
REGISTERED
PROFESSIONAL ENGINEER
2/21/2005

HARUTUNIAN ENGINEERING INCORPORATED
ENGINEERING AND ENVIRONMENTAL CONSULTANTS
305 EAST HUNTLAND DRIVE SUITE 500
AUSTIN, TEXAS 78752

REUSE OF DOCUMENTS
This document and the ideas and designs incorporated herein as an instrument of professional service has been developed, designed and prepared by Harutunian Engineering, Inc. and is not to be used, in whole or part, for any other project without the written authorization of Water District No. 10 and Harutunian Engineering, Inc. © 2005

DATE DESCRIPTION

DWN HEI
CHECKED BY
HEI
APPROVED BY
HEI
DATE
FEBRUARY 2005
SCALE
NONE

TRAVIS COUNTY WATER CONTROL & IMPROVEMENT DISTRICT NO 10
PUMP STATION NO 1

PUMPING UNIT "P-7"
PLC I/O WIRING SCHEMATIC
(SHEET 3 OF 4)

PROJECT NO 2002-210 | SHEET 126 | DWG NO E-PLC-017

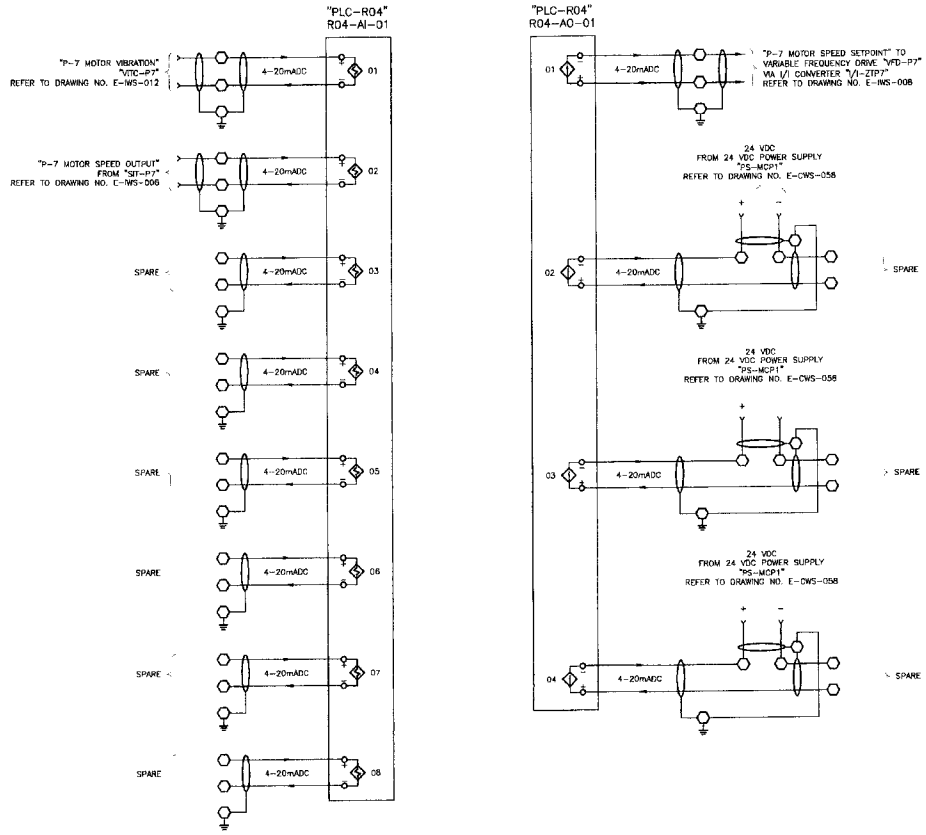


## WIRING AND TERMINAL DEVICE LEGEND:

— — INDICATES WIRING BETWEEN PANELS OR TO A FIELD MOUNTED DEVICE.

o DEVICE WIRING TERMINAL

□ PROPOSED TERMINAL BLOCK LOCATED IN PROPOSED 480V MOTOR CONTROL CENTER (MCC) "MCC-001A" OR "MCC-001B", AS APPLICABLE. ANY DEVICE SHOWN WITH DEVICE WIRING TERMINALS CONNECTED DIRECTLY TO THESE SYMBOLS WITH SOLID LINES IS ALSO LOCATED IN PROPOSED 480V MCC "MCC-001A" OR "MCC-001B" AS APPLICABLE.

⬡ PROPOSED TERMINAL BLOCK LOCATED IN PROPOSED MAIN CONTROL PANEL "MCP-001" ANY DEVICE SHOWN WITH DEVICE WIRING TERMINALS CONNECTED DIRECTLY TO THESE SYMBOLS WITH SOLID LINES IS ALSO LOCATED IN MAIN CONTROL PANEL "MCP-001"

## REFERENCE DRAWINGS:

E-FP-004 – EQUIPMENT LOCATION PLAN

E-CWS-037 – E-CWS-041 – PUMP CONTROL SCHEMATIC

E-CWS-048 – VALVE CONTROL SCHEMATIC

E-PLC-001 – PLC ARCHITECTURE

E-CWS-051 – E-CWS-052 – MCP ELEVATIONS

K. Arbuthnot
STATE OF TEXAS
KEITH ARBUTHNOT
REGISTERED
PROFESSIONAL ENGINEER
2/21/2005

HARUTUNIAN ENGINEERING INCORPORATED
ENGINEERING AND ENVIRONMENTAL CONSULTANTS
305 EAST HUNTLAND DRIVE SUITE 500
AUSTIN, TEXAS 78752

REUSE OF DOCUMENTS
This document and the ideas and designs incorporated herein as an instrument of professional service has been developed, designed and prepared by Harutunian Engineering, Inc. and is not to be used, in whole or part, for any other project without the written authorization of Water District No. 10 and Harutunian Engineering, Inc. © 2001

HEI
HEI
HEI
FEBRUARY 2005
NONE

TRAVIS COUNTY WATER CONTROL & IMPROVEMENT DISTRICT NO 10
PUMP STATION NO 1

PUMPING UNIT "P-7"
PLC I/O WIRING SCHEMATIC
(SHEET 4 OF 4)

2002-210 | SHEET 127 | E-PLC-018

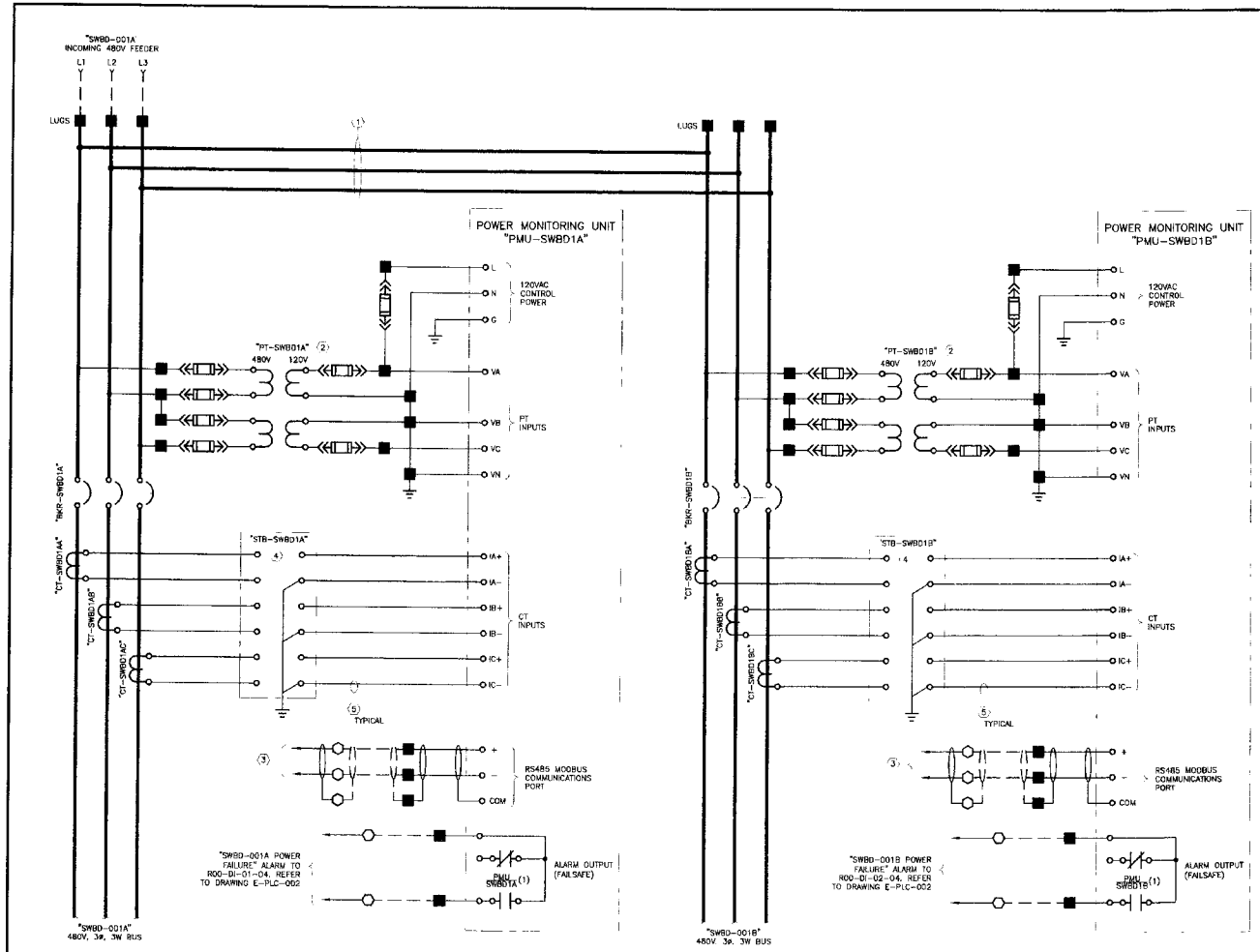


## WIRING AND TERMINAL DEVICE LEGEND.

— — INDICATES WIRING BETWEEN PANELS OR TO A FIELD MOUNTED DEVICE.

o DEVICE WIRING TERMINAL.

■ PROPOSED TERMINAL BLOCK LOCATED IN PROPOSED 480V SWITCHBOARD (SWBD) "SWBD-001A" OR "SWBD-001B", AS APPLICABLE. ANY DEVICE SHOWN WITH DEVICE WIRING TERMINALS CONNECTED DIRECTLY TO THESE SYMBOLS WITH SOLID LINES IS ALSO LOCATED IN PROPOSED 480V MCC "SWBD-001A" OR "SWBD-001B", AS APPLICABLE.

○ PROPOSED TERMINAL BLOCK LOCATED IN PROPOSED MAIN CONTROL PANEL "MCP-001". ANY DEVICE SHOWN WITH DEVICE WIRING TERMINALS CONNECTED DIRECTLY TO THESE SYMBOLS WITH SOLID LINES IS ALSO LOCATED IN MAIN CONTROL PANEL "MCP-001"

## KEY NOTES.

(1) REMOVABLE BUS LINK CONNECTING "SWBD-001A" AND "SWBD-001B". THIS BUS LINK SHALL BE REMOVABLE TO FACILITATE FUTURE INSTALLATION OF SECOND INCOMING SERVICE.

(2) PROPOSED POTENTIAL TRANSFORMER(S) SHALL BE SIZED ACCORDING TO ELECTRICAL SPECIFICATIONS. CALCULATION OF PROPOSED POTENTIAL TRANSFORMER RATING SHALL INCLUDE THE POWER CONSUMPTION OF ALL PROPOSED CONNECTED EQUIPMENT

(3) TO/FROM RS485/232 COMMUNICATION CONVERTER LOCATED INSIDE MAIN CONTROL PANEL "MCP-001" REFER TO DRAWING NO. E-PLC-001 FOR ADDITIONAL INFORMATION.

(4) ALTHOUGH NOT SHOWN HERE, FURNISH AND INSTALL A DEDICATED SHORTING TERMINAL BLOCK FOR EACH MULTI-RATIO CURRENT TRANSFORMER. WIRE ALL MULTI-RATIO CURRENT TRANSFORMER TAPS TO THEIR DEDICATED SHORTING TERMINAL BLOCK. ALSO REFER TO THE SPECIFICATIONS FOR ADDITIONAL INFORMATION.

(5) COORDINATE THE LENGTH OF THE SHORTING TERMINAL BLOCK/POWER MONITORING UNIT INTERCONNECT WIRING TO ALLOW FOR WIRE TO CONNECT TO ANY OF THE SHORTING TERMINAL BLOCK TERMINALS CORRESPONDING TO THE MULTI-RATIO CURRENT TRANSFORMER TAP SETTINGS.

## GENERAL NOTES.

1 CLOSELY AND CAREFULLY COORDINATE WITH THE SWITCHBOARD MANUFACTURER AND MAKE ALL FINAL CONNECTIONS.

## REFERENCE DRAWINGS.

E-OL-007 – E-OL-009 – ONE-LINE DIAGRAMS

E-PLC-001 – PLC ARCHITECTURE

E-CWS-051 – E-CWS-052 – MCP ELEVATIONS

2/21/2005

HARUTUNIAN ENGINEERING INCORPORATED

ENGINEERING AND ENVIRONMENTAL CONSULTANTS
305 EAST HUNTLAND DRIVE SUITE 500
AUSTIN, TEXAS 78752

REUSE OF DOCUMENTS
This document and the ideas and designs incorporated herein as an instrument of professional service has been developed, designed and prepared by Harutunian Engineering, Inc. and is not to be used, in whole or part, for any other project without the written authorization of Water District No. 10 and Harutunian Engineering, Inc. © 2005

HEI
HEI
HEI
FEBRUARY 2005
NONE

TRAVIS COUNTY WATER CONTROL & IMPROVEMENT DISTRICT NO 10
PUMP STATION NO 1

# 480V SWITCHBOARD
# POWER MONITORING UNIT (PMU) WIRING SCHEMATIC

2002-210 | SHEET 128 | E-IWS-001

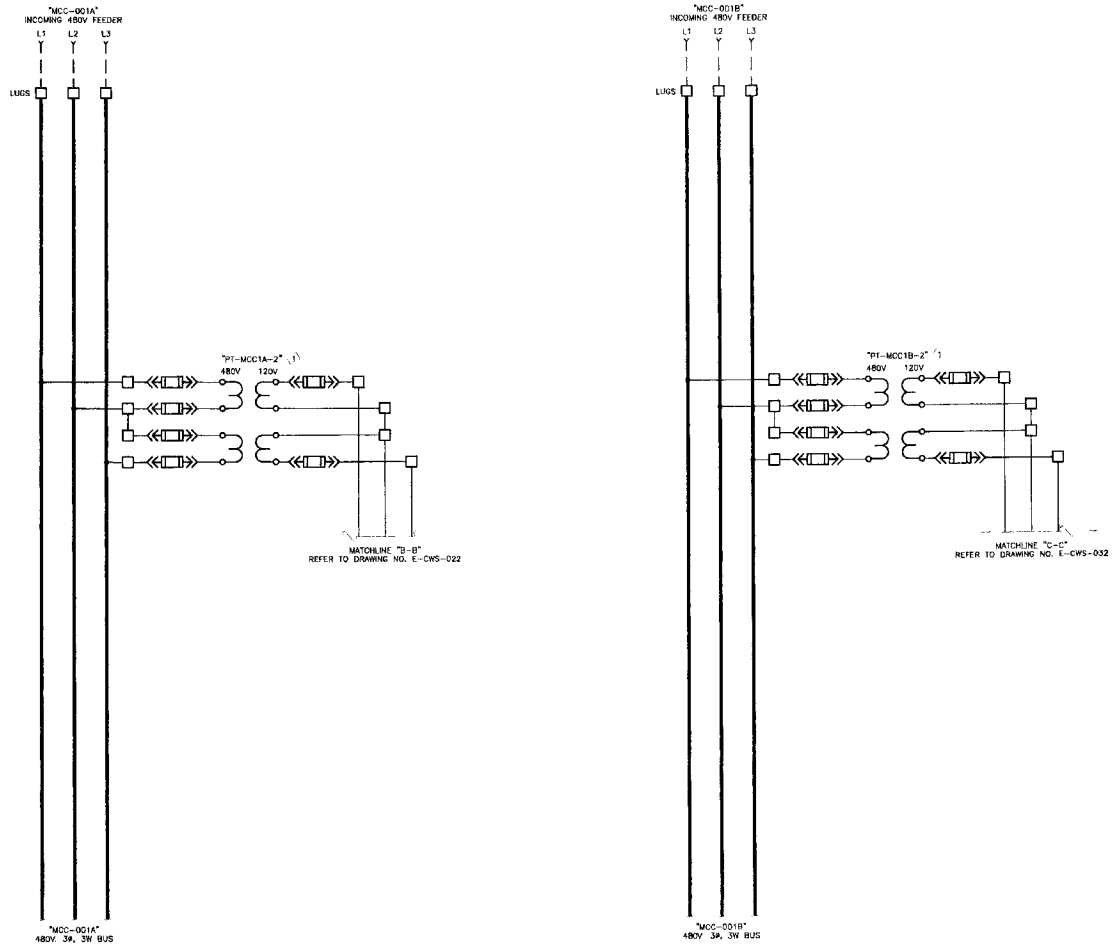


WIRING AND TERMINAL DEVICE LEGEND:

— — INDICATES WIRING BETWEEN PANELS OR TO A FIELD MOUNTED DEVICE.

o DEVICE WIRING TERMINAL

□ PROPOSED TERMINAL BLOCK LOCATED IN PROPOSED 480V MOTOR CONTROL CENTER (MCC) "MCC-001A" OR "MCC-001B" AS APPLICABLE. ANY DEVICE SHOWN WITH DEVICE WIRING TERMINALS CONNECTED DIRECTLY TO THESE SYMBOLS WITH SOLID LINES IS ALSO LOCATED IN PROPOSED 480V MCC "MCC-001A" OR "MCC-001B", AS APPLICABLE

KEY NOTES:

(1) PROPOSED POTENTIAL TRANSFORMER(S) SHALL BE SIZED ACCORDING TO ELECTRICAL SPECIFICATIONS. CALCULATION OF PROPOSED POTENTIAL TRANSFORMER RATING SHALL INCLUDE THE POWER CONSUMPTION OF ALL PROPOSED CONNECTED EQUIPMENT

GENERAL NOTES:

1 CLOSELY AND CAREFULLY COORDINATE WITH THE MOTOR CONTROL CENTER MANUFACTURER AND MAKE ALL FINAL CONNECTIONS.

REFERENCE DRAWINGS:

E-OL-010 – E-OL-013 – ONE-LINE DIAGRAMS

RIM FINISH IN ORIGINAL DRAWING EQUALS ONE INCH FOR SCALE AT TERMINALS

STATE OF TEXAS
K. A. HARUTUNIAN
REGISTERED
PROFESSIONAL ENGINEER
2/21/2005

HARUTUNIAN ENGINEERING INCORPORATED
ENGINEERING AND ENVIRONMENTAL CONSULTANTS
305 EAST HUNTLAND DRIVE SUITE 500
AUSTIN, TEXAS 78752

REUSE OF DOCUMENTS
This document and the ideas and designs incorporated herein as an instrument of professional service has been developed, designed and prepared by Harutunian Engineering, Inc. and is not to be used, in whole or part, for any other project without the written authorization of Water District No. 10 and Harutunian Engineering, Inc. © 2005

DESIGNED BY HEI
DRAWN BY HEI
REVIEWED BY HEI
SUBMITTED DATE FEBRUARY 2005
SCALE NONE

TRAVIS COUNTY WATER CONTROL & IMPROVEMENT DISTRICT NO. 10
PUMP STATION NO. 1

480V MOTOR CONTROL CENTER
BUS POTENTIAL TRANSFORMER WIRING SCHEMATIC

JOB NO. 2002-210 | SHEET 129 | DWG. E-IWS-002

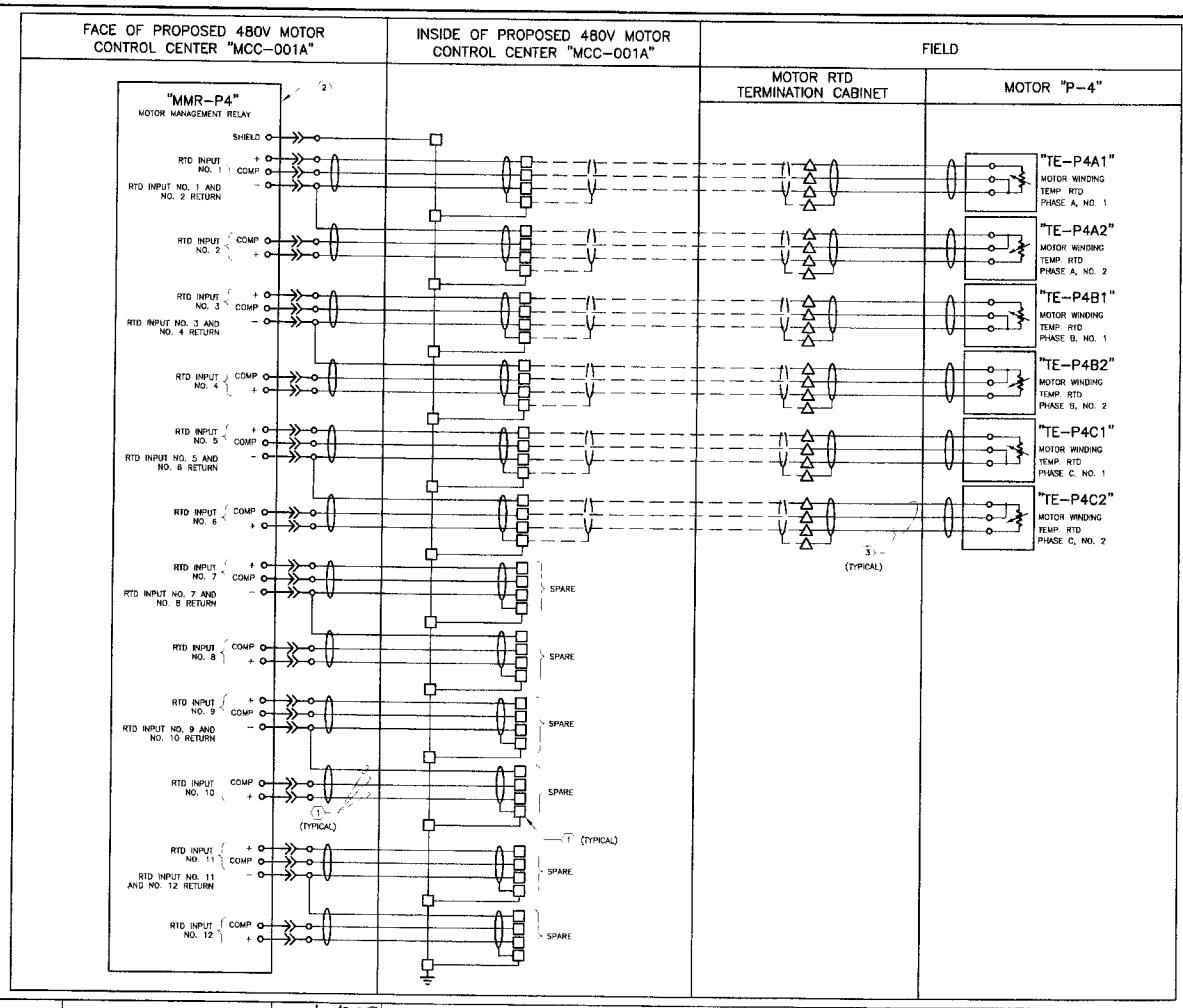


## WIRING AND TERMINAL DEVICE LEGEND:

— — INDICATES WIRING BETWEEN PANELS OR TO A FIELD MOUNTED DEVICE.

o DEVICE WIRING TERMINAL

□ PROPOSED TERMINAL BLOCK LOCATED IN PROPOSED 480V MOTOR CONTROL CENTER (MCC) "MCC-001A" OR "MCC-001B", AS APPLICABLE. ANY DEVICE SHOWN WITH DEVICE WIRING TERMINALS CONNECTED DIRECTLY TO THESE SYMBOLS WITH SOLID LINES IS ALSO LOCATED IN PROPOSED 480V MCC "MCC-001A" OR "MCC-001B", AS APPLICABLE.

△ TERMINAL BLOCK LOCATED IN FIELD MOUNTED EQUIPMENT AS NOTED. ANY DEVICE SHOWN WITH DEVICE WIRING TERMINALS CONNECTED DIRECTLY TO THESE SYMBOLS WITH SOLID LINES IS ALSO LOCATED IN OR ON EQUIPMENT

## KEY NOTES:

1. FURNISH AND INSTALL ADDITIONAL WIRING AND TERMINAL BLOCKS FOR FUTURE CONNECTION TO LOOP.
2. NOT ALL CONNECTIONS TO THE MOTOR MANAGEMENT RELAY ARE SHOWN HERE. REFER TO PLC ARCHITECTURE DRAWING AND DISTRIBUTION PUMP CONTROL LOGIC DRAWINGS FOR ADDITIONAL CONNECTIONS TO THE MOTOR MANAGEMENT RELAY
3. EACH MOTOR WINDING RTD SHALL BE WIRED TO TERMINAL BLOCKS LOCATED INSIDE THE MOTOR RTD TERMINATION CABINET BY THE MOTOR MANUFACTURER (TYPICAL FOR SIX RTDS).

## GENERAL NOTES:

1 CLOSELY AND CAREFULLY COORDINATE WITH THE MOTOR CONTROL CENTER MANUFACTURER AND MAKE ALL FINAL CONNECTIONS.

## REFERENCE DRAWINGS:

E-PLC-001 – PLC ARCHITECTURE

E-CWS-022 – E-CWS-026 – PUMP CONTROL LOGIC

E-OL-010 – E-OL-013 – ONE-LINE DIAGRAMS

BAR LENGTH ON ORIGINAL DRAWING IS 15 CM. IN ADJUST SCALE MORE NEEDED

2/21/2005

HARUTUNIAN ENGINEERING INCORPORATED

ENGINEERING AND ENVIRONMENTAL CONSULTANTS
305 EAST HUNTLAND DRIVE SUITE 500
AUSTIN, TEXAS 78752

REUSE OF DOCUMENTS

This document and the ideas and designs incorporated herein as an instrument of professional service has been developed, designed and prepared by Harutunian Engineering, Inc. and is not to be used, in whole or part, for any other project without the written authorization of Water District No. 10 and Harutunian Engineering, Inc. © 2005

HEI
HEI
HEI
FEBRUARY 2005
NONE

TRAVIS COUNTY WATER CONTROL & IMPROVEMENT DISTRICT NO 10
PUMP STATION NO 1

# PUMP MOTOR NO. 4 "P-4" MOTOR MANAGEMENT RELAY INSTRUMENT WIRING SCHEMATIC

2002-210 | SHEET 130 | E-IWS-003

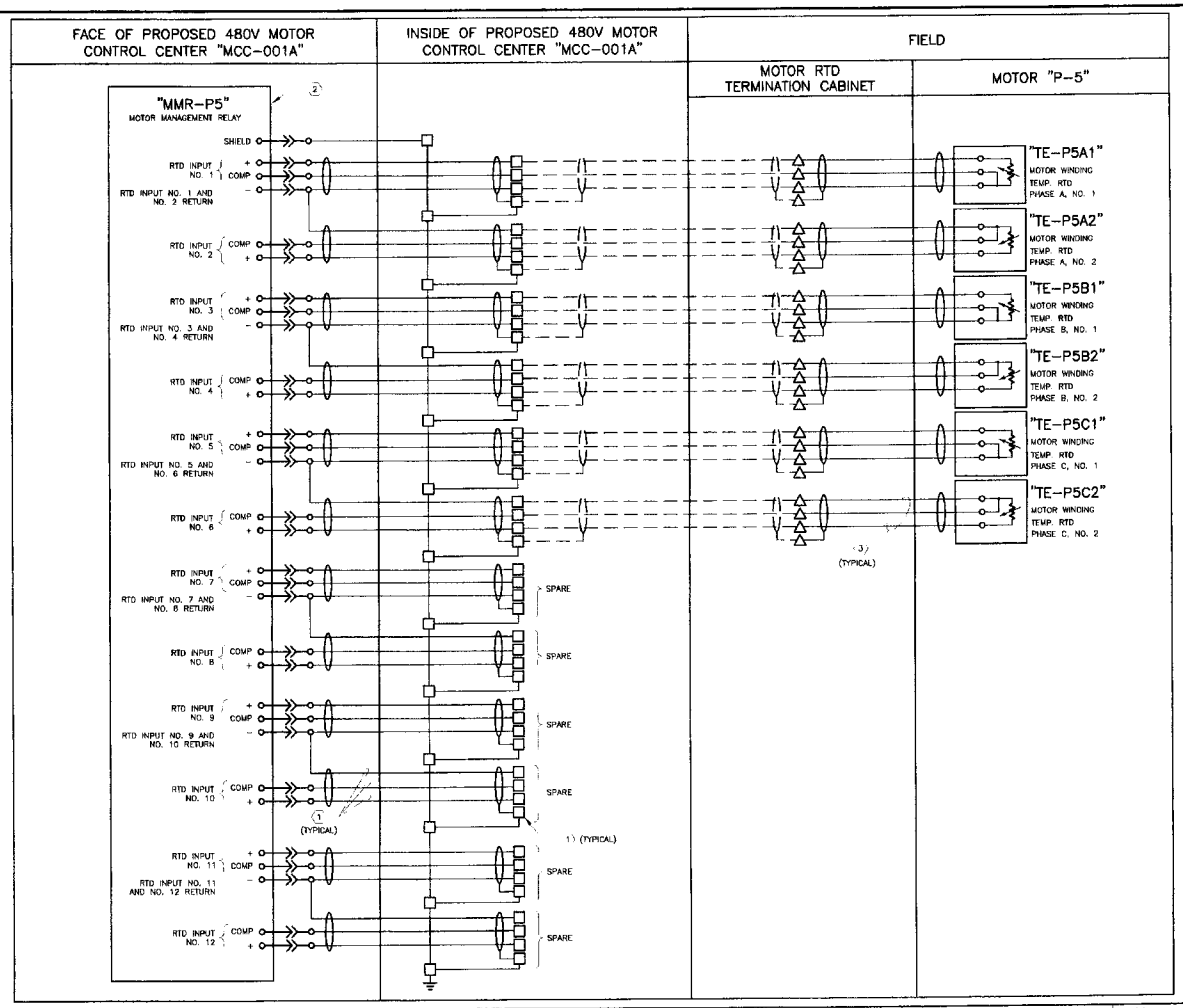


## WIRING AND TERMINAL DEVICE LEGEND:

- — — INDICATES WIRING BETWEEN PANELS OR TO A FIELD MOUNTED DEVICE.
- o DEVICE WIRING TERMINAL
- □ PROPOSED TERMINAL BLOCK LOCATED IN PROPOSED 480V MOTOR CONTROL CENTER (MCC) "MCC-001A" OR "MCC-001B" AS APPLICABLE. ANY DEVICE SHOWN WITH DEVICE WIRING TERMINALS CONNECTED DIRECTLY TO THESE SYMBOLS WITH SOLID LINES IS ALSO LOCATED IN PROPOSED 480V MCC "MCC-001A" OR "MCC-001B", AS APPLICABLE.
- △ TERMINAL BLOCK LOCATED IN FIELD MOUNTED EQUIPMENT AS NOTED. ANY DEVICE SHOWN WITH DEVICE WIRING TERMINALS CONNECTED DIRECTLY TO THESE SYMBOLS WITH SOLID LINES IS ALSO LOCATED IN OR ON EQUIPMENT

## KEY NOTES:

1. FURNISH AND INSTALL ADDITIONAL WIRING AND TERMINAL BLOCKS FOR FUTURE CONNECTION TO LOOP
2. NOT ALL CONNECTIONS TO THE MOTOR MANAGEMENT RELAY ARE SHOWN HERE. REFER TO PLC ARCHITECTURE DRAWING AND DISTRIBUTION PUMP CONTROL LOGIC DRAWINGS FOR ADDITIONAL CONNECTIONS TO THE MOTOR MANAGEMENT RELAY
3. EACH MOTOR WINDING RTD SHALL BE WIRED TO TERMINAL BLOCKS LOCATED INSIDE THE MOTOR RTD TERMINATION CABINET BY THE MOTOR MANUFACTURER (TYPICAL FOR SIX RTDS).

## GENERAL NOTES:

1. CLOSELY AND CAREFULLY COORDINATE WITH THE MOTOR CONTROL CENTER MANUFACTURER AND MAKE ALL FINAL CONNECTIONS.

## REFERENCE DRAWINGS:

E-PLC-001 – PLC ARCHITECTURE

E-CWS-027 – E-CWS-031 – PUMP CONTROL LOGIC

E-OL-010 – E-OL-013 – ONE-LINE DIAGRAMS

DWG. ... ORIGINAL DRAWING ... ON 24" X 36" SCALE ... APPROVED

STATE OF TEXAS REGISTERED PROFESSIONAL ENGINEER 2/21/2005

HARUTUNIAN ENGINEERING INCORPORATED
ENGINEERING AND ENVIRONMENTAL CONSULTANTS
305 EAST HUNTLAND DRIVE SUITE 500
AUSTIN, TEXAS 78752

REUSE OF DOCUMENTS
This document and the ideas and designs incorporated herein as an instrument of professional service has been developed, designed and prepared by Harutunian Engineering, Inc. and is not to be used, in whole or part, for any other project without the written authorization of Water District No. 10 and Harutunian Engineering, Inc. © 2005

| | |
|---|---|
| DESIGNED BY | HEI |
| DRAWN BY | HEI |
| APPROVED BY | HEI |
| SUBMITTED | FEBRUARY 2005 |
| SCALE | NONE |

TRAVIS COUNTY WATER CONTROL & IMPROVEMENT DISTRICT NO 10
PUMP STATION NO 1

PUMP MOTOR NO. 5 "P-5"
MOTOR MANAGEMENT RELAY
INSTRUMENT WIRING SCHEMATIC

PROJ. NO. 2002-210 | SHEET 131 | DWG. NO. E-IWS-004

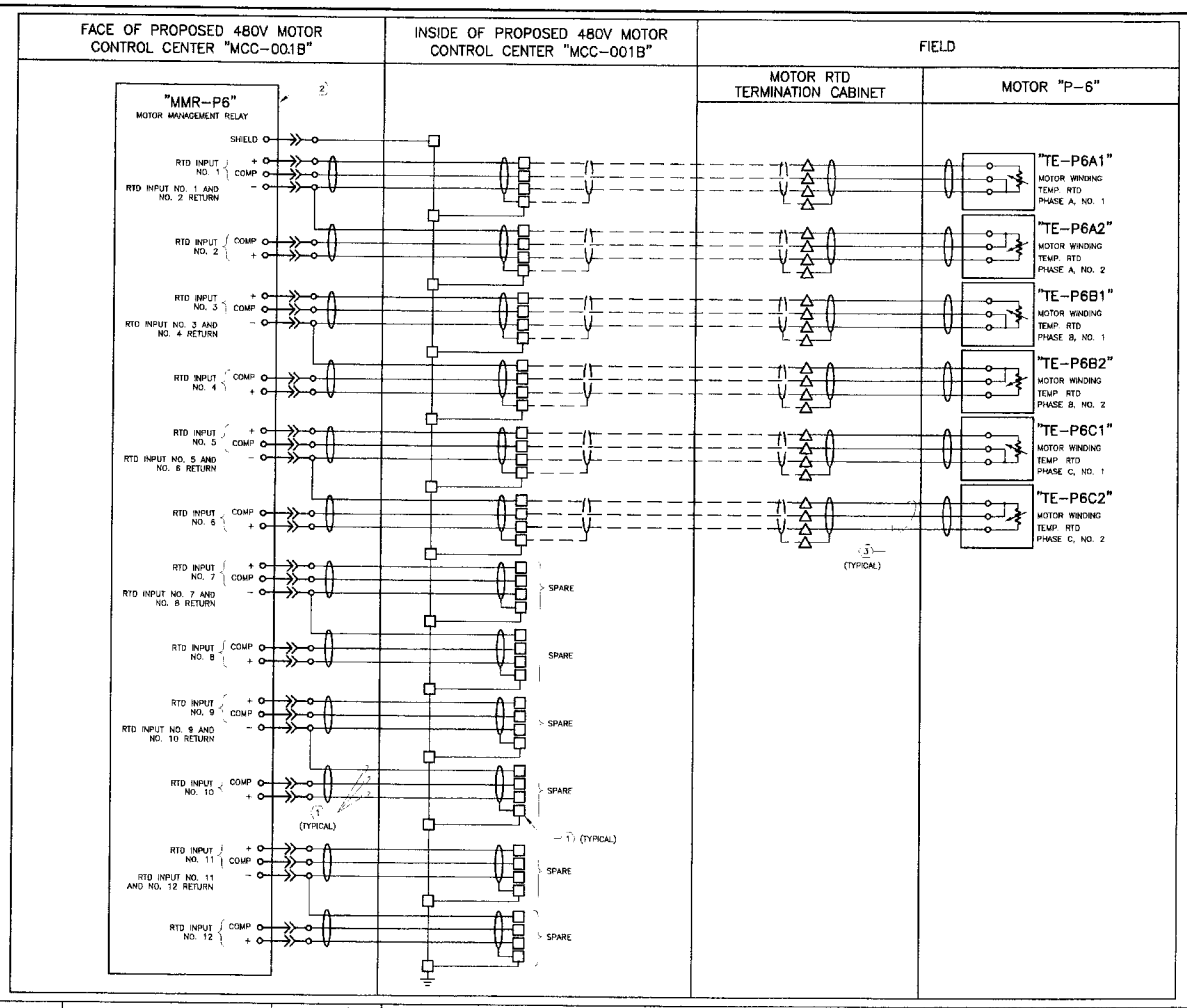


## WIRING AND TERMINAL DEVICE LEGEND:

— — INDICATES WIRING BETWEEN PANELS OR TO A FIELD MOUNTED DEVICE.

o DEVICE WIRING TERMINAL

□ PROPOSED TERMINAL BLOCK LOCATED IN PROPOSED 480V MOTOR CONTROL CENTER (MCC) "MCC-001A" OR "MCC-001B", AS APPLICABLE. ANY DEVICE SHOWN WITH DEVICE WIRING TERMINALS CONNECTED DIRECTLY TO THESE SYMBOLS WITH SOLID LINES IS ALSO LOCATED IN PROPOSED 480V MCC "MCC-001A" OR "MCC-001B" AS APPLICABLE.

△ TERMINAL BLOCK LOCATED IN FIELD MOUNTED EQUIPMENT AS NOTED. ANY DEVICE SHOWN WITH DEVICE WIRING TERMINALS CONNECTED DIRECTLY TO THESE SYMBOLS WITH SOLID LINES IS ALSO LOCATED IN OR ON EQUIPMENT.

## KEY NOTES:

1. FURNISH AND INSTALL ADDITIONAL WIRING AND TERMINAL BLOCKS FOR FUTURE CONNECTION TO LOOP.
2. NOT ALL CONNECTIONS TO THE MOTOR MANAGEMENT RELAY ARE SHOWN HERE. REFER TO PLC ARCHITECTURE DRAWING AND DISTRIBUTION PUMP CONTROL LOGIC DRAWINGS FOR ADDITIONAL CONNECTIONS TO THE MOTOR MANAGEMENT RELAY.
3. EACH MOTOR WINDING RTD SHALL BE WIRED TO TERMINAL BLOCKS LOCATED INSIDE THE MOTOR RTD TERMINATION CABINET BY THE MOTOR MANUFACTURER (TYPICAL FOR SIX RTDS).

## GENERAL NOTES:

1. CLOSELY AND CAREFULLY COORDINATE WITH THE MOTOR CONTROL CENTER MANUFACTURER AND MAKE ALL FINAL CONNECTIONS.

## REFERENCE DRAWINGS:

E-PLC-001 – PLC ARCHITECTURE

E-CWS-032 – E-CWS-036 – PUMP CONTROL LOGIC

E-OL-010 – E-OL-013 – ONE-LINE DIAGRAMS

BAR LENGTH ON ORIGINAL DRAWING EQUAL ONE INCH. AT 1ST SLAH ACCORDINGLY

STATE OF TEXAS — MARK TUMBLIN — 73181 — REGISTERED — PROFESSIONAL ENGINEER
2/21/2005

HARUTUNIAN ENGINEERING INCORPORATED
ENGINEERING AND ENVIRONMENTAL CONSULTANTS
305 EAST HUNTLAND DRIVE SUITE 500
AUSTIN, TEXAS 78752

REUSE OF DOCUMENTS
This document and the ideas and designs incorporated herein as an instrument of professional service has been developed, designed and prepared by Harutunian Engineering, Inc. and is not to be used, in whole or part, for any other project without the written authorization of Water District No. 10 and Harutunian Engineering, Inc. © 2005

| NO. | DATE | DESCRIPTION |
|---|---|---|
| | | |

DRAWN BY HEI
DESIGNED BY HEI
APPROVED BY HEI
DATE FEBRUARY 2005
SCALE NONE

TRAVIS COUNTY WATER CONTROL & IMPROVEMENT DISTRICT NO. 10
PUMP STATION NO. 1

PUMP MOTOR NO. 6 "P-6"
MOTOR MANAGEMENT RELAY
INSTRUMENT WIRING SCHEMATIC

PROJECT NO. 2002-210 | SHEET 132 | DWG. NO. E-IWS-005

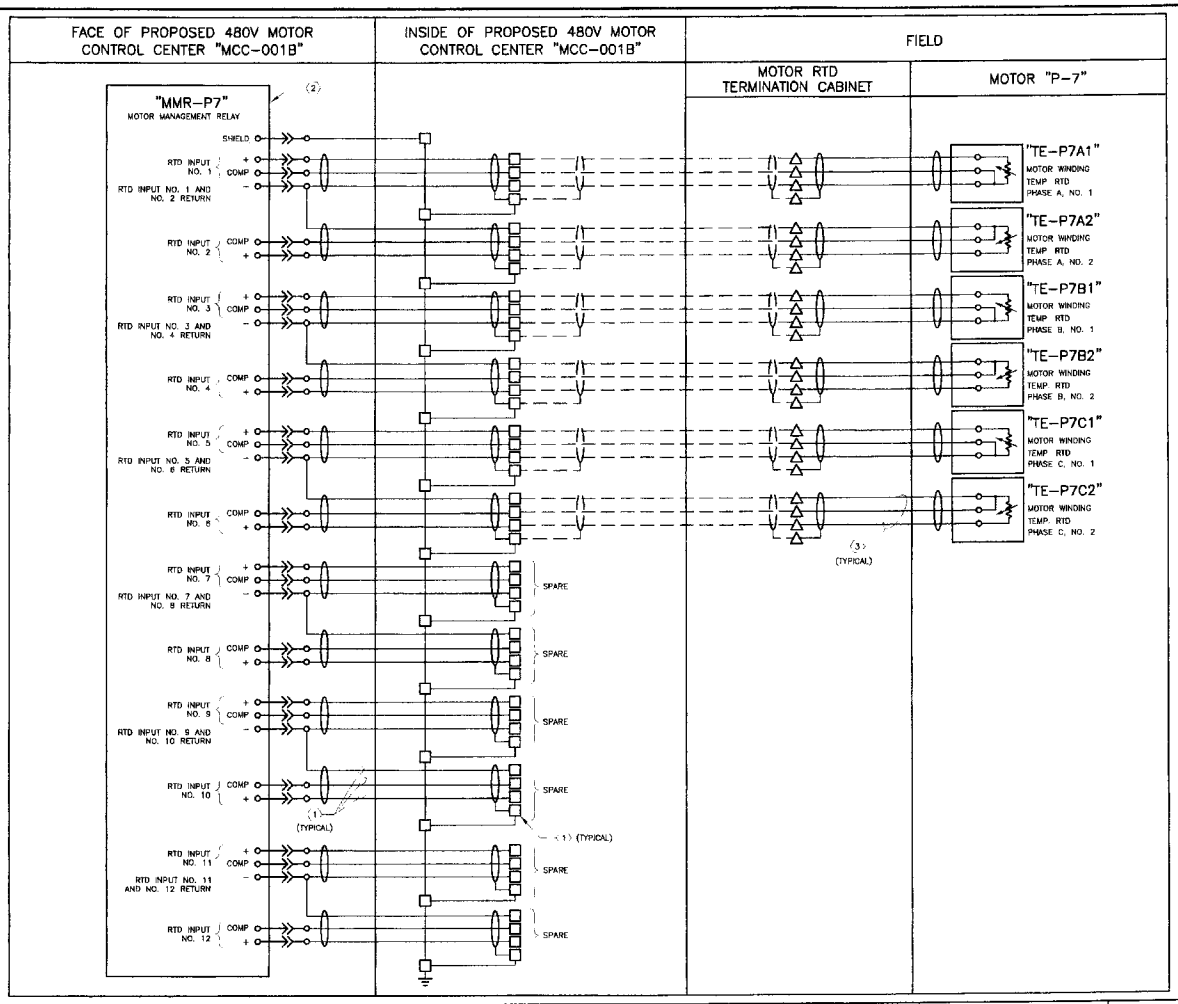


## WIRING AND TERMINAL DEVICE LEGEND:

— — INDICATES WIRING BETWEEN PANELS OR TO A FIELD MOUNTED DEVICE.

o DEVICE WIRING TERMINAL

□ PROPOSED TERMINAL BLOCK LOCATED IN PROPOSED 480V MOTOR CONTROL CENTER (MCC) "MCC-001A" OR "MCC-001B", AS APPLICABLE. ANY DEVICE SHOWN WITH DEVICE WIRING TERMINALS CONNECTED DIRECTLY TO THESE SYMBOLS WITH SOLID LINES IS ALSO LOCATED IN PROPOSED 480V MCC "MCC-001A" OR "MCC-001B", AS APPLICABLE.

△ TERMINAL BLOCK LOCATED IN FIELD MOUNTED EQUIPMENT AS NOTED. ANY DEVICE SHOWN WITH DEVICE WIRING TERMINALS CONNECTED DIRECTLY TO THESE SYMBOLS WITH SOLID LINES IS ALSO LOCATED IN OR ON EQUIPMENT

## KEY NOTES:

(1) FURNISH AND INSTALL ADDITIONAL WIRING AND TERMINAL BLOCKS FOR FUTURE CONNECTION TO LOOP.

(2) NOT ALL CONNECTIONS TO THE MOTOR MANAGEMENT RELAY ARE SHOWN HERE. REFER TO PLC ARCHITECTURE DRAWING AND DISTRIBUTION PUMP CONTROL LOGIC DRAWINGS FOR ADDITIONAL CONNECTIONS TO THE MOTOR MANAGEMENT RELAY

(3) EACH MOTOR WINDING RTD SHALL BE WIRED TO TERMINAL BLOCKS LOCATED INSIDE THE MOTOR RTD TERMINATION CABINET BY THE MOTOR MANUFACTURER (TYPICAL FOR SIX RTDS).

## GENERAL NOTES:

1 CLOSELY AND CAREFULLY COORDINATE WITH THE MOTOR CONTROL CENTER MANUFACTURER AND MAKE ALL FINAL CONNECTIONS.

## REFERENCE DRAWINGS:

E-PLC-001 – PLC ARCHITECTURE

E-CWS-037 – E-CWS-041 – PUMP CONTROL LOGIC

E-OL-010 – E-OL-013 – ONE-LINE DIAGRAMS

BAR LENGTH IS ORIGINAL DRAWING INCHES. ONE INCH ADJUST SCALE ACCORDINGLY

K. A. Harutunian
STATE OF TEXAS
K. A. HARUTUNIAN
REGISTERED
PROFESSIONAL ENGINEER
2/21/2005

HARUTUNIAN ENGINEERING INCORPORATED
ENGINEERING AND ENVIRONMENTAL CONSULTANTS
305 EAST HUNTLAND DRIVE SUITE 500
AUSTIN, TEXAS 78752

REUSE OF DOCUMENTS
This document and the ideas and designs incorporated herein as an instrument of professional service has been developed, designed and prepared by Harutunian Engineering, Inc. and is not to be used, in whole or part, for any other project without the written authorization of Water District No. 10 and Harutunian Engineering, Inc. © 2005

DRAWN BY HEI
CHECKED BY HEI
APPROVED BY HEI
SUBMITTED BY
DATE FEBRUARY 2005
SCALE NONE

TRAVIS COUNTY WATER CONTROL & IMPROVEMENT DISTRICT NO 10
PUMP STATION NO. 1

PUMP MOTOR NO. 7 "P-7"
MOTOR MANAGEMENT RELAY
INSTRUMENT WIRING SCHEMATIC

PROJ. NO. 2002-210 | SHEET 133 | DWG. NO. E-IWS-006

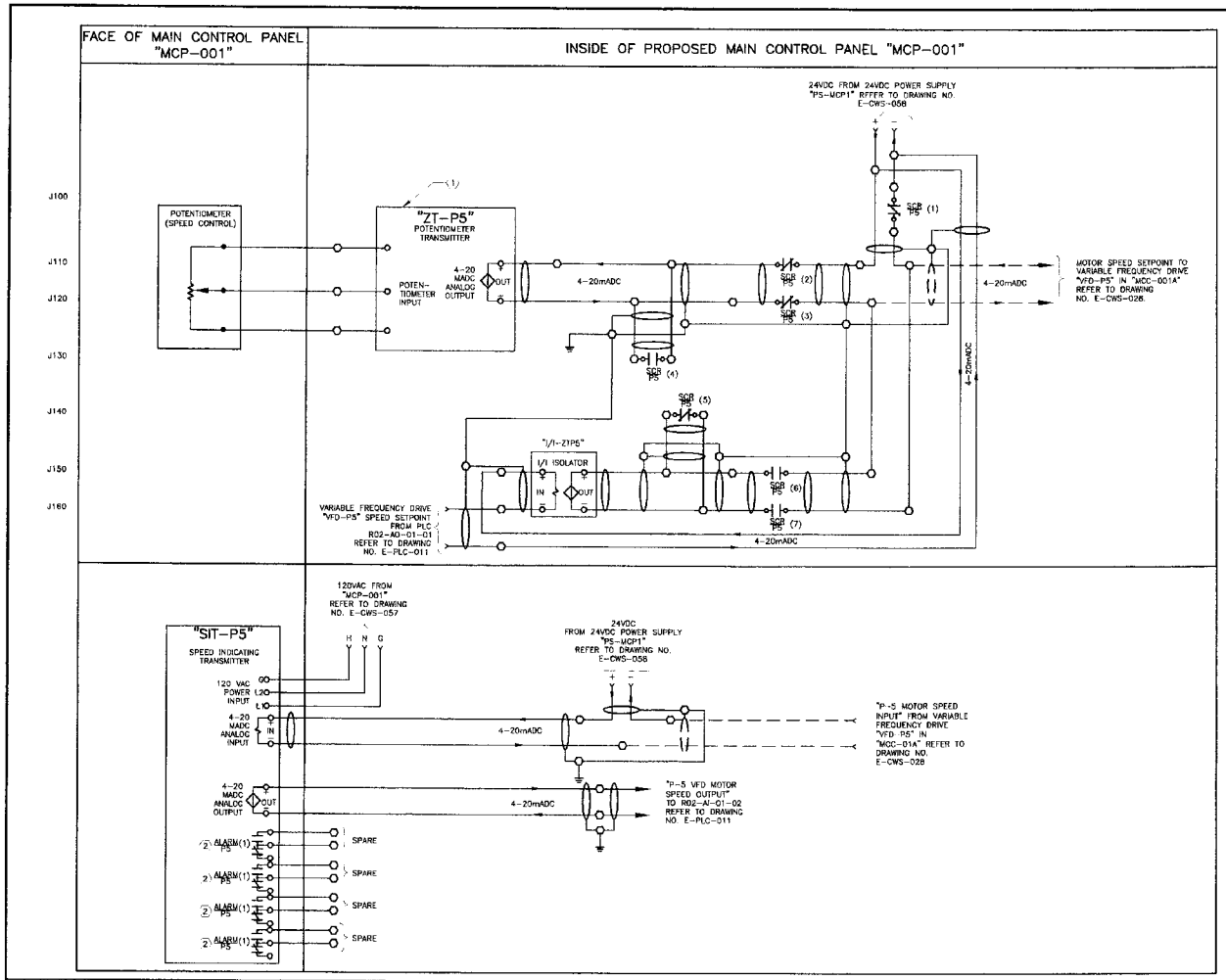


## WIRING AND TERMINAL DEVICE LEGEND.

— — INDICATES WIRING BETWEEN PANELS OR TO A FIELD MOUNTED DEVICE.

o DEVICE WIRING TERMINAL.

⬡ PROPOSED TERMINAL BLOCK LOCATED IN PROPOSED MAIN CONTROL PANEL "MCP-001" ANY DEVICE SHOWN WITH DEVICE WIRING TERMINALS CONNECTED DIRECTLY TO THESE SYMBOLS WITH SOLID LINES IS ALSO LOCATED IN MAIN CONTROL PANEL "MCP-001"

## KEY NOTES:

(1) CONTRACTOR SHALL COORDINATE THE POTENTIOMETER RESISTANCE AND SETPOINT VALUES REQUIRED WITH THE VARIABLE FREQUENCY DRIVE MANUFACTURER AND MAKE ALL FINAL CONNECTIONS.

(2) THE OUTPUT RELAYS SHALL BE SWITCHED AS FAILSAFE AND SHALL BE NON-LATCHING.

## REFERENCE DRAWINGS:

E-CWS-027 – E-CWS-031 – PUMP MOTOR CONTROL LOGIC

E-CWS-05B – POWER WIRING SCHEMATIC

E-PLC-001 – PLC ARCHITECTURE

E-PLC-008 – E-PLC-011 – PLC I/O WIRING SCHEMATICS

E-CWS-051 – E-CWS-052 – MCP ELEVATIONS

BAR LENGTH ON ORIGINAL DRAWING EQUALS 1" IN ADJUST SCALE ACCORDINGLY

K. A. Harutunian STATE OF TEXAS K. A. HARUTUNIAN 58811 REGISTERED PROFESSIONAL ENGINEER 2/21/2005

HARUTUNIAN ENGINEERING INCORPORATED
ENGINEERING AND ENVIRONMENTAL CONSULTANTS
305 EAST HUNTLAND DRIVE SUITE 500
AUSTIN, TEXAS 78752

REUSE OF DOCUMENTS
This document and the ideas and designs incorporated herein as an instrument of professional service has been developed, designed and prepared by Harutunian Engineering, Inc. and is not to be used, in whole or part, for any other project without the written authorization of Water District No. 10 and Harutunian Engineering, Inc. © 2005

| | |
|---|---|
| DR. | HEI |
| CH. | HEI |
| DS. | HEI |
| DATE | FEBRUARY 2005 |
| SCALE | NONE |

TRAVIS COUNTY WATER CONTROL & IMPROVEMENT DISTRICT NO. 10
PUMP STATION NO. 1

# PUMP MOTOR NO. 5 "P-5" POTENTIOMETER & SPEED INDICATOR TRANSMITTERS INSTRUMENT WIRING SCHEMATIC

JOB NO. 2002-210 | SHEET 134 | E-IWS-007

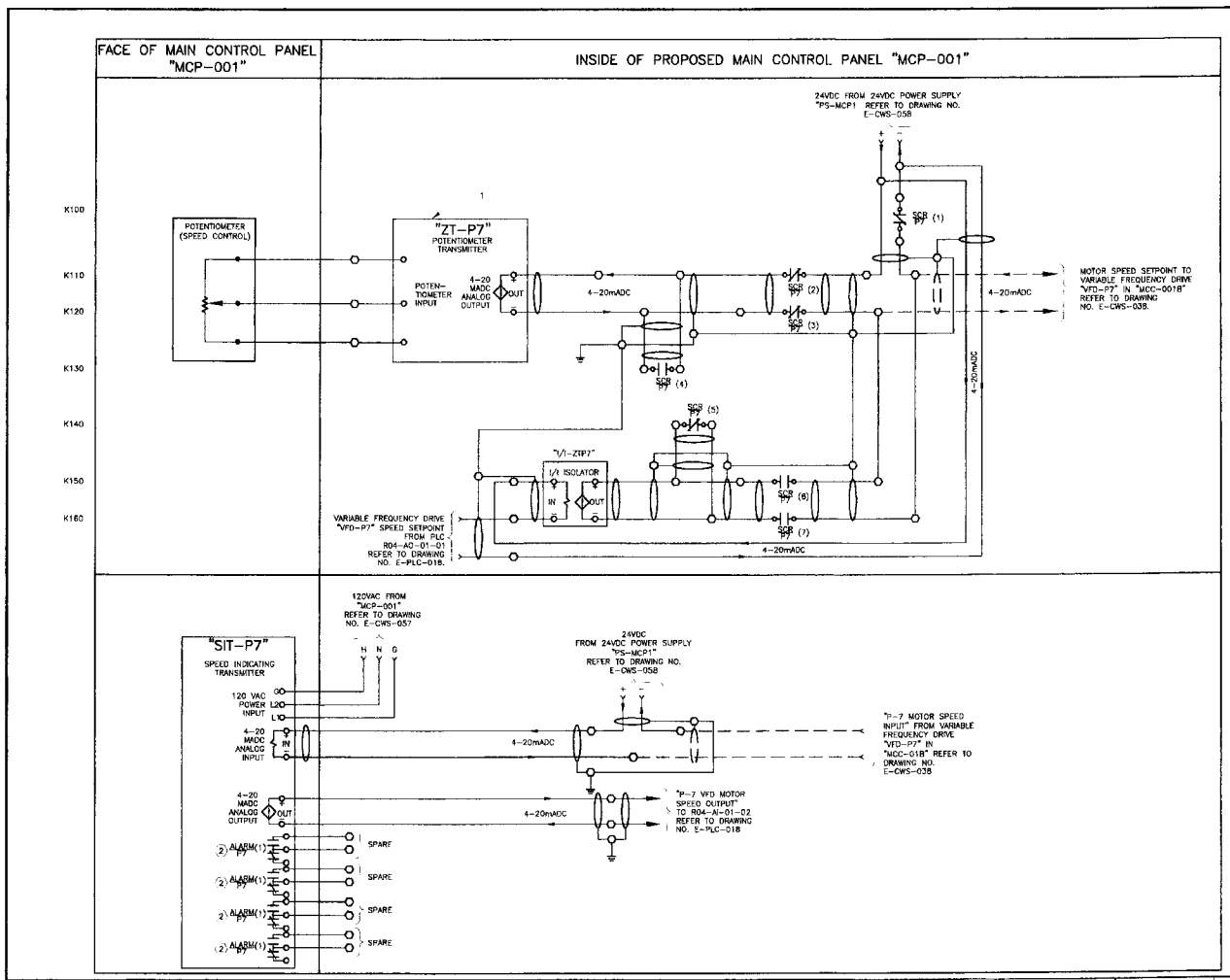


## WIRING AND TERMINAL DEVICE LEGEND:

— — INDICATES WIRING BETWEEN PANELS OR TO A FIELD MOUNTED DEVICE.

o DEVICE WIRING TERMINAL

⬡ PROPOSED TERMINAL BLOCK LOCATED IN PROPOSED MAIN CONTROL PANEL "MCP-001". ANY DEVICE SHOWN WITH DEVICE WIRING TERMINALS CONNECTED DIRECTLY TO THESE SYMBOLS WITH SOLID LINES IS ALSO LOCATED IN MAIN CONTROL PANEL "MCP-001"

## KEY NOTES:

(1) CONTRACTOR SHALL COORDINATE THE POTENTIOMETER RESISTANCE AND SETPOINT VALUES REQUIRED WITH THE VARIABLE FREQUENCY DRIVE MANUFACTURER AND MAKE ALL FINAL CONNECTIONS.

(2) THE OUTPUT RELAYS SHALL BE SWITCHED AS FAILSAFE AND SHALL BE NON-LATCHING.

## REFERENCE DRAWINGS.

E-CWS-037 – E-CWS-041 – PUMP MOTOR CONTROL LOGIC

E-CWS-058 – POWER WIRING SCHEMATIC

E-PLC-001 – PLC ARCHITECTURE

E-PLC-015 – E-PLC-018 – PLC I/O WIRING SCHEMATICS

E-CWS-051 – E-CWS-052 – MCP ELEVATIONS

2/6/2005

HARUTUNIAN ENGINEERING INCORPORATED

ENGINEERING AND ENVIRONMENTAL CONSULTANTS
305 EAST HUNTLAND DRIVE SUITE 500
AUSTIN, TEXAS 78752

REUSE OF DOCUMENTS
This document and the ideas and designs incorporated herein as an instrument of professional service has been developed, designed and prepared by Harutunian Engineering, Inc. and is not to be used, in whole or part, for any other project without the written authorization of Water District No. 10 and Harutunian Engineering, Inc. © 2005

DESIGNED BY HEI
CHECKED BY HEI
DATE HEI
FEBRUARY 2005
SCALE NONE

TRAVIS COUNTY WATER CONTROL & IMPROVEMENT DISTRICT NO 10
PUMP STATION NO 1

PUMP MOTOR NO. 7 "P-7"
POTENTIOMETER & SPEED INDICATOR TRANSMITTERS
INSTRUMENT WIRING SCHEMATIC

2002-210 | SHEET 135 | E-IWS-008

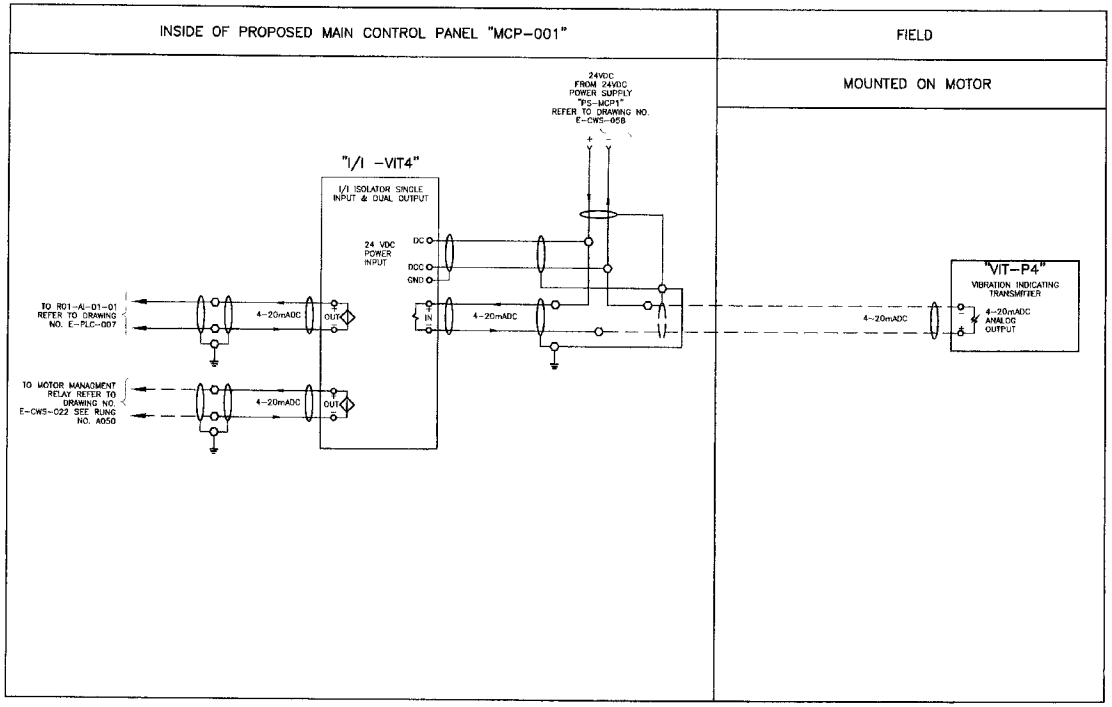


WIRING AND TERMINAL DEVICE LEGEND:

— — INDICATES WIRING BETWEEN PANELS OR TO A FIELD MOUNTED DEVICE.

o DEVICE WIRING TERMINAL

⬡ PROPOSED TERMINAL BLOCK LOCATED IN PROPOSED MAIN CONTROL PANEL "MCP-001". ANY DEVICE SHOWN WITH DEVICE WIRING TERMINALS CONNECTED DIRECTLY TO THESE SYMBOLS WITH SOLID LINES IS ALSO LOCATED IN MAIN CONTROL PANEL "MCP-001"

△ TERMINAL BLOCK LOCATED IN FIELD MOUNTED EQUIPMENT AS NOTED. ANY DEVICE SHOWN WITH DEVICE WIRING TERMINALS CONNECTED DIRECTLY TO THESE SYMBOLS WITH SOLID LINES IS ALSO LOCATED IN OR ON EQUIPMENT

GENERAL NOTES:

1 CLOSELY AND CAREFULLY COORDINATE INSTRUMENT INSTALLATION/LOCATION WITH STRUCTURAL/MECHANICAL DISCIPLINES AND OWNER REPRESENTATIVE.

REFERENCE DRAWINGS:

E-CWS-022 – E-CWS-026 – PUMP MOTOR CONTROL LOGIC

E-CWS-057 – E-CWS-059 – POWER WIRING SCHEMATICS

E-PLC-001 – PLC ARCHITECTURE

E-PLC-005 – E-PLC-007 – PLC I/O WIRING SCHEMATICS

E-CWS-051 – E-CWS-052 – MCP ELEVATIONS

RASTER REPRODUCTION OF ORIGINAL DRAWING. ORIGINAL WILL BEGIN ADJUST SCALE ACCORDINGLY

K. A. Harutunian
STATE OF TEXAS
K. A. HARUTUNIAN
59181
REGISTERED
PROFESSIONAL ENGINEER
2/21/2005

HARUTUNIAN ENGINEERING INCORPORATED
ENGINEERING AND ENVIRONMENTAL CONSULTANTS
305 EAST HUNTLAND DRIVE SUITE 500
AUSTIN, TEXAS 78752

REUSE OF DOCUMENTS
This document and the ideas and designs incorporated herein as an instrument of professional service has been developed, designed and prepared by Harutunian Engineering, Inc. and is not to be used, in whole or part, for any other project without the written authorization of Water District No. 10 and Harutunian Engineering, Inc. © 2005

DESIGNED BY HEI
DRAWN BY HEI
APPROVED BY HEI
SUBMITTAL DATE FEBRUARY 2005
SCALE NONE

TRAVIS COUNTY WATER CONTROL & IMPROVEMENT DISTRICT NO 10
PUMP STATION NO 1

PUMP MOTOR NO. 4 "P-4"
VIBRATION INDICATING TRANSMITTER
INSTRUMENT WIRING SCHEMATIC

PROJECT NO 2002-210 | SHEET 136 | DWG NO E-IWS-009

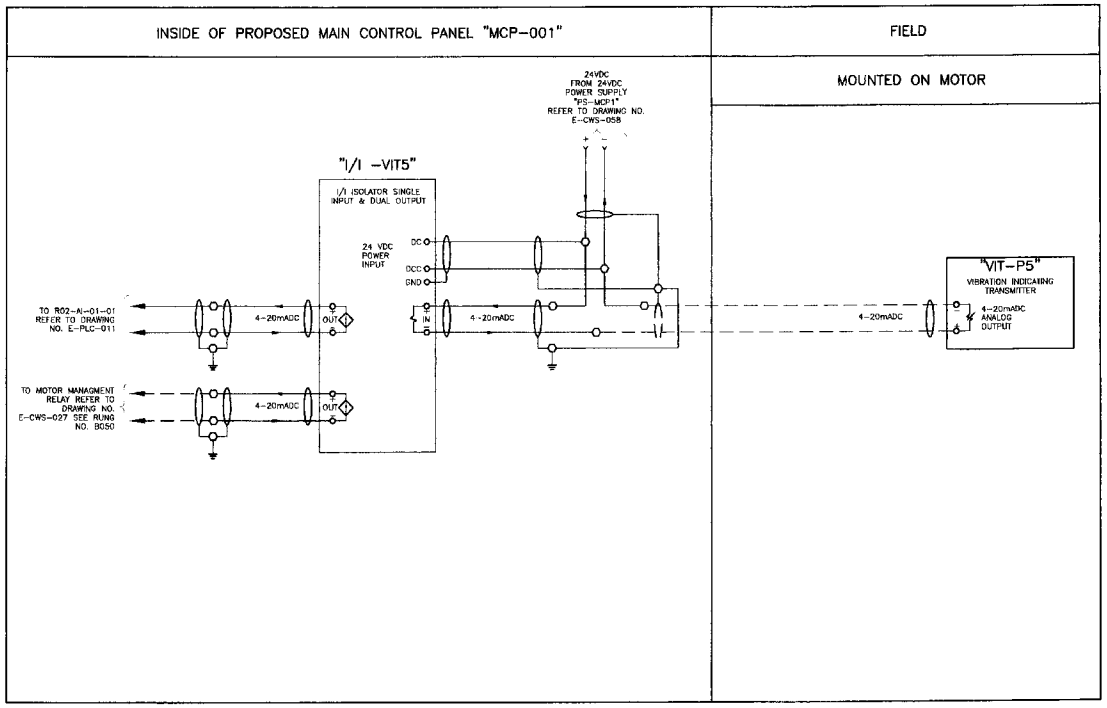


WIRING AND TERMINAL DEVICE LEGEND:

— — INDICATES WIRING BETWEEN PANELS OR TO A FIELD MOUNTED DEVICE.

o DEVICE WIRING TERMINAL

⬡ PROPOSED TERMINAL BLOCK LOCATED IN PROPOSED MAIN CONTROL PANEL "MCP-001" ANY DEVICE SHOWN WITH DEVICE WIRING TERMINALS CONNECTED DIRECTLY TO THESE SYMBOLS WITH SOLID LINES IS ALSO LOCATED IN MAIN CONTROL PANEL "MCP-001"

△ TERMINAL BLOCK LOCATED IN FIELD MOUNTED EQUIPMENT AS NOTED. ANY DEVICE SHOWN WITH DEVICE WIRING TERMINALS CONNECTED DIRECTLY TO THESE SYMBOLS WITH SOLID LINES IS ALSO LOCATED IN OR ON EQUIPMENT

GENERAL NOTES:

1 CLOSELY AND CAREFULLY COORDINATE INSTRUMENT INSTALLATION/LOCATION WITH STRUCTURAL/MECHANICAL DISCIPLINES AND OWNER REPRESENTATIVE.

REFERENCE DRAWINGS:

E-CWS-027 – E-CWS-031 – PUMP MOTOR CONTROL LOGIC

E-CWS-057 – E-CWS-059 – POWER WIRING SCHEMATICS

E-PLC-001 – PLC ARCHITECTURE

E-PLC-008 – E-PLC-011 – PLC I/O WIRING SCHEMATICS

E-CWS-051 – E-CWS-052 – MCP ELEVATIONS

BAR IS ONE INCH ON ORIGINAL DRAWING IF NOT ADJUST SCALE ACCORDINGLY

STATE OF TEXAS — REGISTERED PROFESSIONAL ENGINEER — 2/2/2005

HARUTUNIAN ENGINEERING INCORPORATED
ENGINEERING AND ENVIRONMENTAL CONSULTANTS
305 EAST HUNTLAND DRIVE SUITE 500
AUSTIN, TEXAS 78752

REUSE OF DOCUMENTS
This document and the ideas and designs incorporated herein as an instrument of professional service has been developed, designed and prepared by Harutunian Engineering, Inc. and is not to be used, in whole or part, for any other project without the written authorization of Water District No. 10 and Harutunian Engineering, Inc. © 2005

NO. DATE DESCRIPTION

DESIGNED BY HEI
CHECKED BY HEI
APPROVED BY HEI
DATE FEBRUARY 2005
SCALE NONE

TRAVIS COUNTY WATER CONTROL & IMPROVEMENT DISTRICT NO 10
PUMP STATION NO. 1

PUMP MOTOR NO. 5 "P-5"
VIBRATION INDICATING TRANSMITTER
INSTRUMENT WIRING SCHEMATIC

PROJECT NO 2002-210 | SHEET 137 | NO E-IWS-010

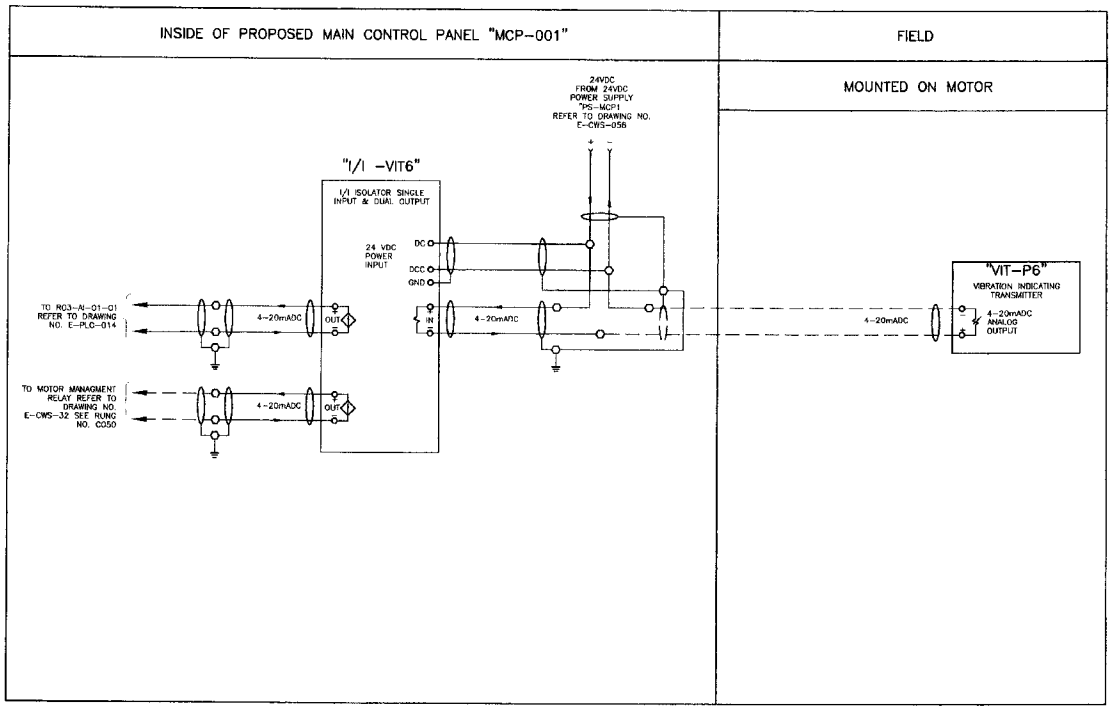


## WIRING AND TERMINAL DEVICE LEGEND:

— — INDICATES WIRING BETWEEN PANELS OR TO A FIELD MOUNTED DEVICE.

o DEVICE WIRING TERMINAL.

⬡ PROPOSED TERMINAL BLOCK LOCATED IN PROPOSED MAIN CONTROL PANEL "MCP-001" ANY DEVICE SHOWN WITH DEVICE WIRING TERMINALS CONNECTED DIRECTLY TO THESE SYMBOLS WITH SOLID LINES IS ALSO LOCATED IN MAIN CONTROL PANEL "MCP-001"

△ TERMINAL BLOCK LOCATED IN FIELD MOUNTED EQUIPMENT AS NOTED. ANY DEVICE SHOWN WITH DEVICE WIRING TERMINALS CONNECTED DIRECTLY TO THESE SYMBOLS WITH SOLID LINES IS ALSO LOCATED IN OR ON EQUIPMENT

## GENERAL NOTES:

1 CLOSELY AND CAREFULLY COORDINATE INSTRUMENT INSTALLATION/LOCATION WITH STRUCTURAL/MECHANICAL DISCIPLINES AND OWNER REPRESENTATIVE.

## REFERENCE DRAWINGS:

E-CWS-032 – E-CWS-036 – PUMP MOTOR CONTROL LOGIC

E-CWS-057 – E-CWS-059 – POWER WIRING SCHEMATICS

E-PLC-001 – PLC ARCHITECTURE

E-PLC-012 – E-PLC-014 – PLC I/O WIRING SCHEMATICS

E-CWS-051 – E-CWS-052 – MCP ELEVATIONS

BAR LENGTH ON ORIGINAL DRAWING EQUALS ONE INCH. ADJUST SCALE ACCORDINGLY

2/21/2005

HARUTUNIAN ENGINEERING INCORPORATED
ENGINEERING AND ENVIRONMENTAL CONSULTANTS
305 EAST HUNTLAND DRIVE SUITE 500
AUSTIN, TEXAS 78752

REUSE OF DOCUMENTS
This document and the ideas and designs incorporated herein as an instrument of professional service has been developed, designed and prepared by Harutunian Engineering, Inc. and is not to be used, in whole or part, for any other project without the written authorization of Water District No. 10 and Harutunian Engineering, Inc. © 2005

DRAWN BY HEI
DESIGNED BY HEI
CHECKED BY HEI
DATE FEBRUARY 2005
SCALE NONE

TRAVIS COUNTY WATER CONTROL & IMPROVEMENT DISTRICT NO. 10
PUMP STATION NO. 1

PUMP MOTOR NO. 6 "P-6"
VIBRATION INDICATING TRANSMITTER
INSTRUMENT WIRING SCHEMATIC

PROJECT NO. 2002-210 | SHEET 138 | DWG NO. E-IWS-011

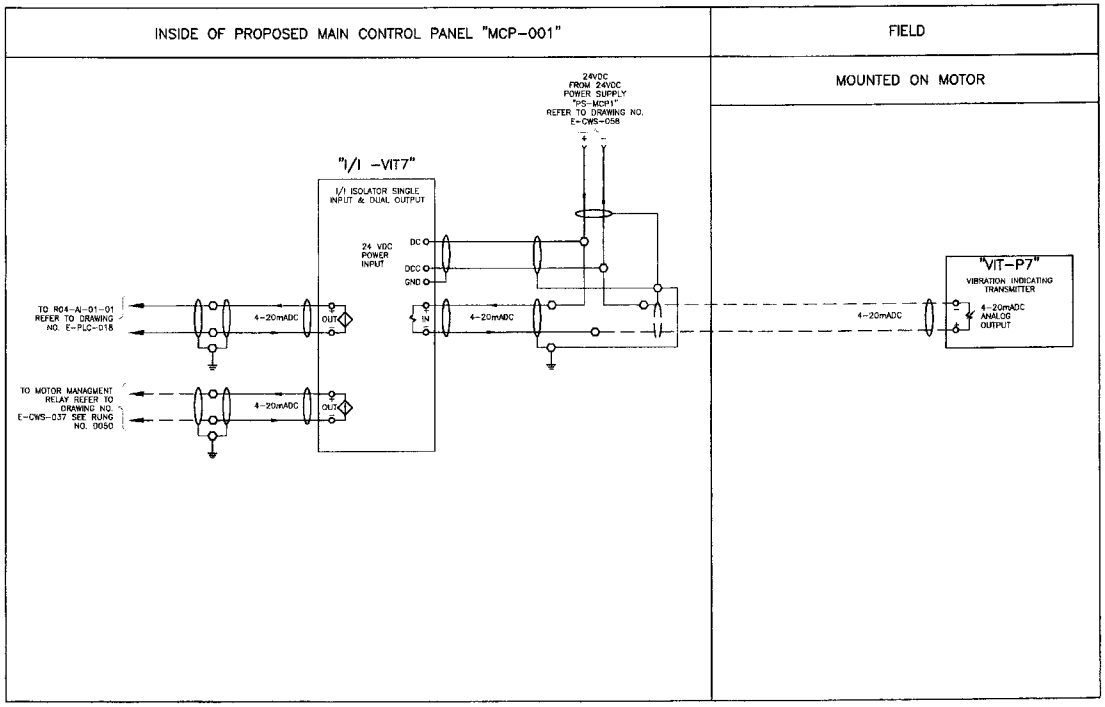


WIRING AND TERMINAL DEVICE LEGEND:

— — INDICATES WIRING BETWEEN PANELS OR TO A FIELD MOUNTED DEVICE.

o DEVICE WIRING TERMINAL

⬡ PROPOSED TERMINAL BLOCK LOCATED IN PROPOSED MAIN CONTROL PANEL "MCP-001" ANY DEVICE SHOWN WITH DEVICE WIRING TERMINALS CONNECTED DIRECTLY TO THESE SYMBOLS WITH SOLID LINES IS ALSO LOCATED IN MAIN CONTROL PANEL "MCP-001"

△ TERMINAL BLOCK LOCATED IN FIELD MOUNTED EQUIPMENT AS NOTED. ANY DEVICE SHOWN WITH DEVICE WIRING TERMINALS CONNECTED DIRECTLY TO THESE SYMBOLS WITH SOLID LINES IS ALSO LOCATED IN OR ON EQUIPMENT

GENERAL NOTES:

1 CLOSELY AND CAREFULLY COORDINATE INSTRUMENT INSTALLATION/LOCATION WITH STRUCTURAL/MECHANICAL DISCIPLINES AND OWNER REPRESENTATIVE.

REFERENCE DRAWINGS:

E-CWS-038 – E-CWS-041 – PUMP MOTOR CONTROL LOGIC

E-CWS-057 – E-CWS-059 – POWER WIRING SCHEMATICS

E-PLC-001 – PLC ARCHITECTURE

E-PLC-015 – E-PLC-018 – PLC I/O WIRING SCHEMATICS

E-CWS-051 – E-CWS-052 – MCP ELEVATIONS

2/21/2005

HARUTUNIAN ENGINEERING INCORPORATED

ENGINEERING AND ENVIRONMENTAL CONSULTANTS
305 EAST HUNTLAND DRIVE SUITE 500
AUSTIN, TEXAS 78752

REUSE OF DOCUMENTS

This document and the ideas and designs incorporated herein as an instrument of professional service has been developed, designed and prepared by Harutunian Engineering, Inc. and is not to be used, in whole or part, for any other project without the written authorization of Water District No. 10 and Harutunian Engineering, Inc. © 2005

HEI
HEI
FEBRUARY 2005
NONE

TRAVIS COUNTY WATER CONTROL & IMPROVEMENT DISTRICT NO. 10
PUMP STATION NO. 1

PUMP MOTOR NO. 7 "P-7"
VIBRATION INDICATING TRANSMITTER
INSTRUMENT WIRING SCHEMATIC

2002-210 | SHEET 139 | E-IWS-012

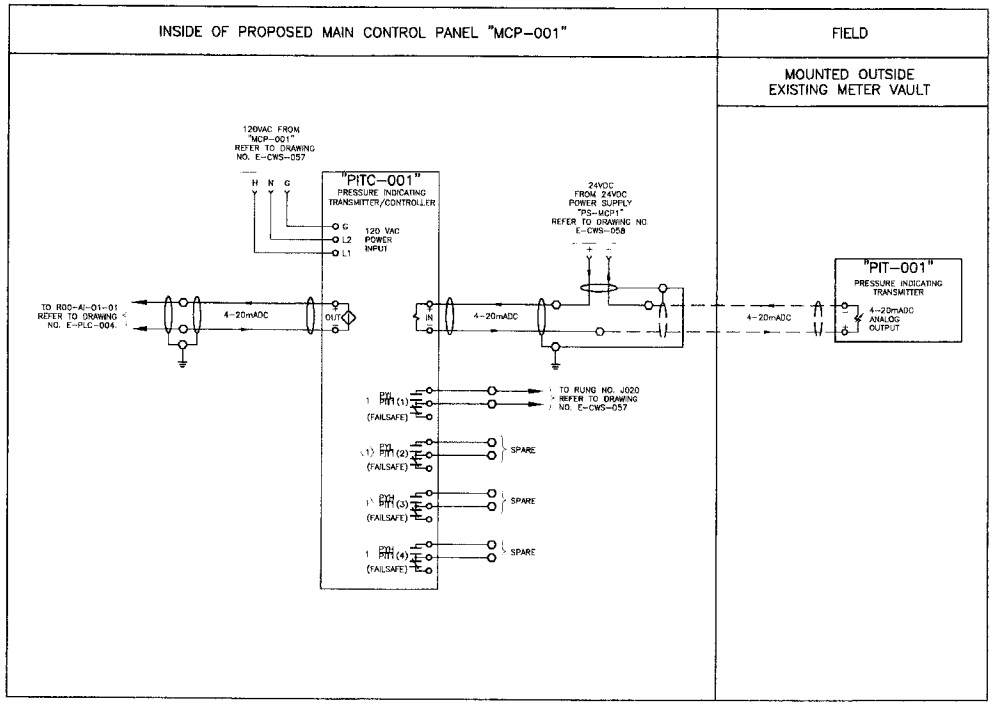


WIRING AND TERMINAL DEVICE LEGEND:

— — INDICATES WIRING BETWEEN PANELS OR TO A FIELD MOUNTED DEVICE.

o DEVICE WIRING TERMINAL

⬡ PROPOSED TERMINAL BLOCK LOCATED IN PROPOSED MAIN CONTROL PANEL "MCP-001" ANY DEVICE SHOWN WITH DEVICE WIRING TERMINALS CONNECTED DIRECTLY TO THESE SYMBOLS WITH SOLID LINES IS ALSO LOCATED IN MAIN CONTROL PANEL "MCP-001"

KEY NOTES:

(1) THE OUTPUT RELAYS SHALL BE SWITCHED AS FAILSAFE AND SHALL BE NON-LATCHING.

GENERAL NOTES:

1. CLOSELY AND CAREFULLY COORDINATE INSTRUMENT INSTALLATION/LOCATION WITH STRUCTURAL/MECHANICAL DISCIPLINES AND OWNER REPRESENTATIVE.
2. DARK LINEWORK DENOTES PROPOSED EQUIPMENT LIGHT LINEWORK DENOTES EXISTING EQUIPMENT

REFERENCE DRAWINGS.

E-CWS-057 – E-CWS-059 – POWER WIRING SCHEMATICS

E-CWS-051 – E-CWS-052 – MCP ELEVATIONS

E-PLC-001 – PLC ARCHITECTURE

E-PLC-002 – E-PLC-004 – PLC I/O WIRING SCHEMATICS

BAR LENGTH ON THIS MAIN DRAWING EQUALS ONE INCH. ADJUST SCALE ACCORDINGLY

2/21/2005

HARUTUNIAN ENGINEERING INCORPORATED

ENGINEERING AND ENVIRONMENTAL CONSULTANTS
305 EAST HUNTLAND DRIVE SUITE 500
AUSTIN, TEXAS 78752

REUSE OF DOCUMENTS

This document and the ideas and designs incorporated herein as an instrument of professional service has been developed, designed and prepared by Harutunian Engineering, Inc. and is not to be used, in whole or part, for any other project without the written authorization of Water District No. 10 and Harutunian Engineering, Inc. © 2005

DESIGNED BY HEI
DRAWN BY HEI
CHECKED BY HEI
DATE FEBRUARY 2005
REVISION NONE

TRAVIS COUNTY WATER CONTROL & IMPROVEMENT DISTRICT NO 10
PUMP STATION NO 1

SUCTION PRESSURE INDICATING TRANSMITTER
INSTRUMENT WIRING SCHEMATIC

PROJECT NO. 2002-210 | SHEET 140 | DWG NO. E-IWS-013

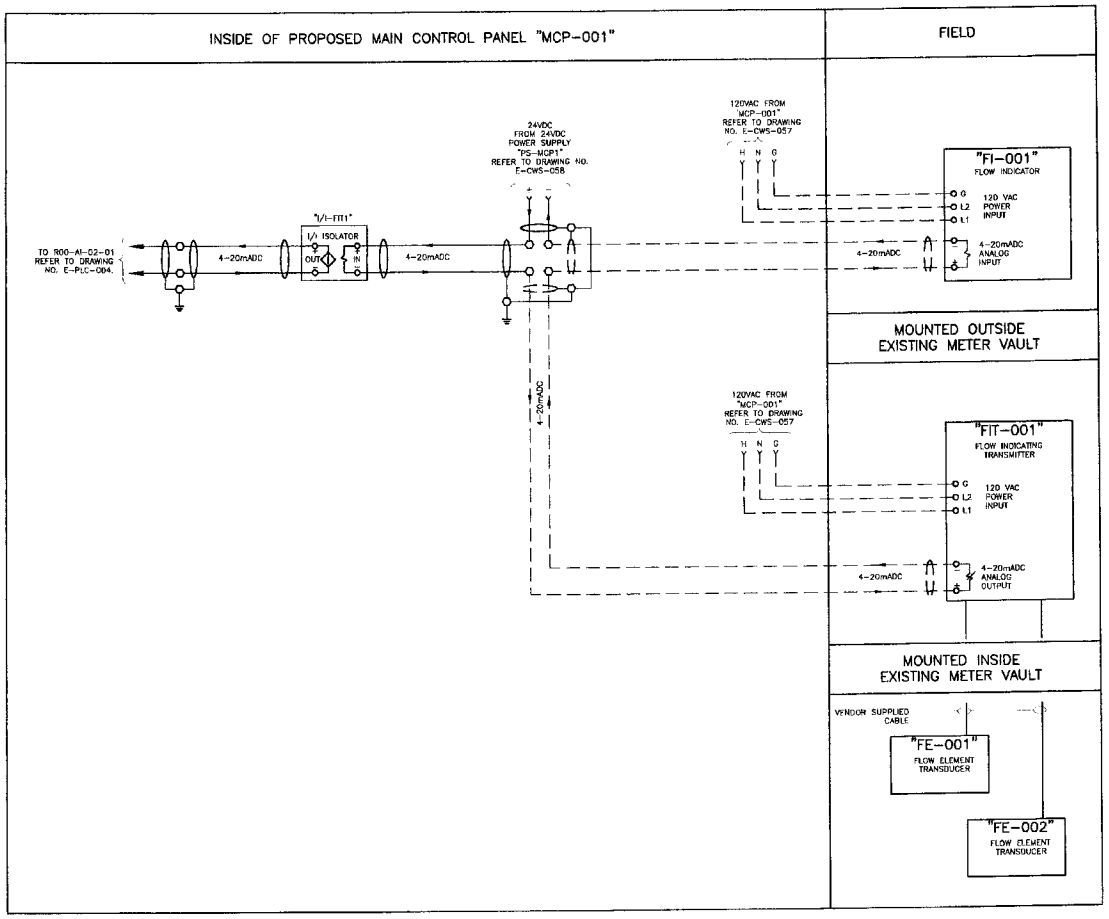


WIRING AND TERMINAL DEVICE LEGEND:

— — INDICATES WIRING BETWEEN PANELS OR TO A FIELD MOUNTED DEVICE.

o DEVICE WIRING TERMINAL

⬡ PROPOSED TERMINAL BLOCK LOCATED IN PROPOSED MAIN CONTROL PANEL "MCP-001" ANY DEVICE SHOWN WITH DEVICE WIRING TERMINALS CONNECTED DIRECTLY TO THESE SYMBOLS WITH SOLID LINES IS ALSO LOCATED IN MAIN CONTROL PANEL "MCP-001"

GENERAL NOTES:

1. CLOSELY AND CAREFULLY COORDINATE INSTRUMENT INSTALLATION/LOCATION WITH STRUCTURAL/MECHANICAL DISCIPLINES AND OWNER REPRESENTATIVE.
2. DARK LINEWORK DENOTES PROPOSED EQUIPMENT LIGHT LINEWORK DENOTES EXISTING EQUIPMENT

REFERENCE DRAWINGS:

E-CWS-057 – E-CWS-059 – POWER WIRING SCHEMATICS

E-CWS-051 – E-CWS-052 – MCP ELEVATIONS

E-PLC-001 – PLC ARCHITECTURE

E-PLC-002 – E-PLC-004 – PLC I/O WIRING SCHEMATICS

2/21/2005

HARUTUNIAN ENGINEERING INCORPORATED

ENGINEERING AND ENVIRONMENTAL CONSULTANTS
305 EAST HUNTLAND DRIVE SUITE 500
AUSTIN, TEXAS 78752

REUSE OF DOCUMENTS

This document and the ideas and designs incorporated herein as an instrument of professional service has been developed, designed and prepared by Harutunian Engineering, Inc. and is not to be used, in whole or part, for any other project without the written authorization of Water District No. 10 and Harutunian Engineering, Inc. © 2005

HEI
HEI
HEI
FEBRUARY 2005
NONE

TRAVIS COUNTY WATER CONTROL & IMPROVEMENT DISTRICT NO 10
PUMP STATION NO. 1

SUCTION FLOW INDICATING TRANSMITTER
INSTRUMENT WIRING SCHEMATIC

2002-210 | SHEET 141 | E-IWS-014

P-TC02159
246

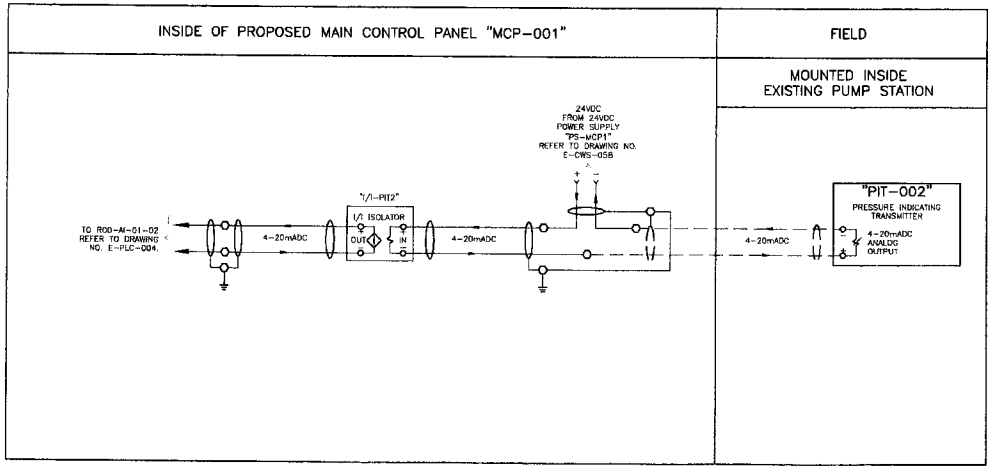


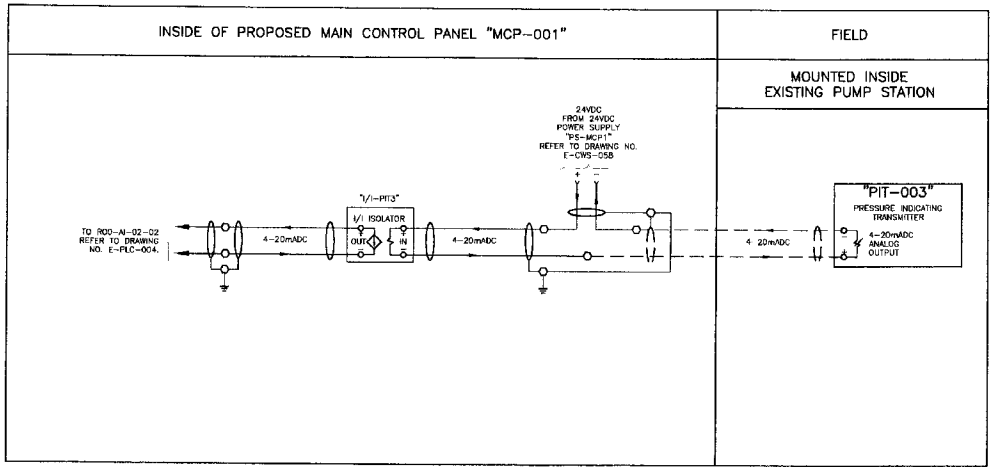


WIRING AND TERMINAL DEVICE LEGEND:

— — INDICATES WIRING BETWEEN PANELS OR TO A FIELD MOUNTED DEVICE.

o DEVICE WIRING TERMINAL

⬡ PROPOSED TERMINAL BLOCK LOCATED IN PROPOSED MAIN CONTROL PANEL "MCP-001" ANY DEVICE SHOWN WITH DEVICE WIRING TERMINALS CONNECTED DIRECTLY TO THESE SYMBOLS WITH SOLID LINES IS ALSO LOCATED IN MAIN CONTROL PANEL "MCP-001"

GENERAL NOTES:

1. CLOSELY AND CAREFULLY COORDINATE INSTRUMENT INSTALLATION/LOCATION WITH STRUCTURAL/MECHANICAL DISCIPLINES AND OWNER REPRESENTATIVE.
2. DARK LINEWORK DENOTES PROPOSED EQUIPMENT LIGHT LINEWORK DENOTES EXISTING EQUIPMENT

REFERENCE DRAWINGS:

E-CWS-057 – E-CWS-059 – POWER WIRING SCHEMATICS

E-CWS-051 – E-CWS-052 – MCP ELEVATIONS

E-PLC-001 – PLC ARCHITECTURE

E-PLC-002 – E-PLC-004 – PLC I/O WIRING SCHEMATICS

2/21/2005

HARUTUNIAN ENGINEERING INCORPORATED

ENGINEERING AND ENVIRONMENTAL CONSULTANTS
305 EAST HUNTLAND DRIVE SUITE 500
AUSTIN, TEXAS 78752

REUSE OF DOCUMENTS

This document and the ideas and designs incorporated herein as an instrument of professional service has been developed, designed and prepared by Harutunian Engineering, Inc. and is not to be used, in whole or part, for any other project without the written authorization of Water District No. 10 and Harutunian Engineering, Inc. © 2005

HEI
HEI
HEI
FEBRUARY 2005
NONE

TRAVIS COUNTY WATER CONTROL & IMPROVEMENT DISTRICT NO 10
PUMP STATION NO 1

DISCHARGE PRESSURE INDICATING TRANSMITTER
INSTRUMENT WIRING SCHEMATIC

PROJ. 2002-210 | SHEET 142 | E-IWS-015

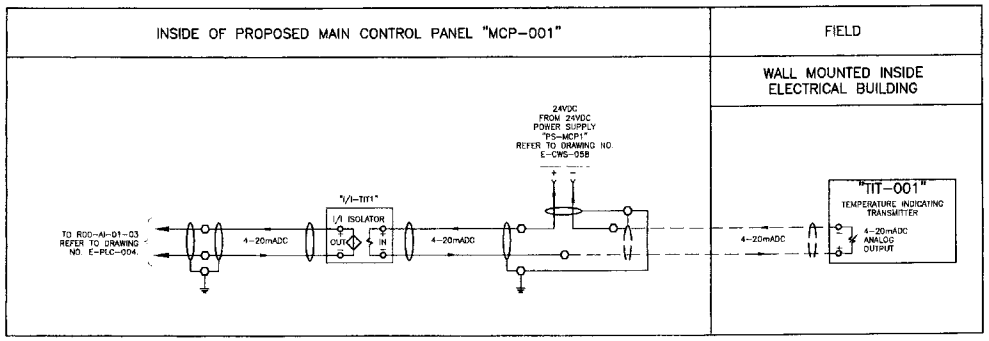


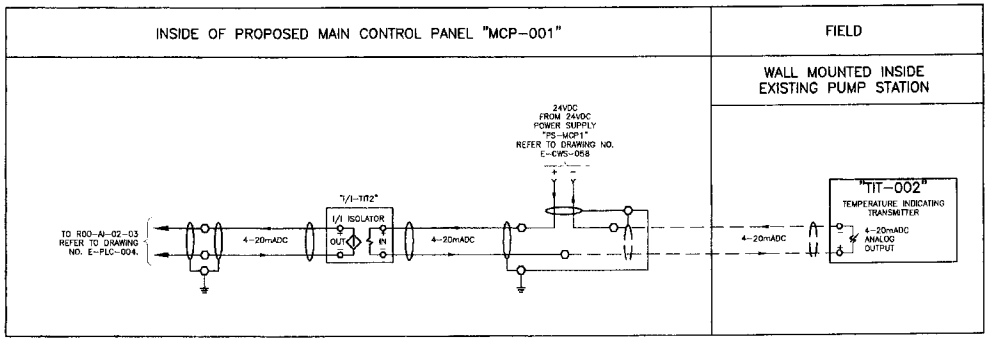


## WIRING AND TERMINAL DEVICE LEGEND:

- — — INDICATES WIRING BETWEEN PANELS OR TO A FIELD MOUNTED DEVICE.
- o DEVICE WIRING TERMINAL
- ⬡ PROPOSED TERMINAL BLOCK LOCATED IN PROPOSED MAIN CONTROL PANEL "MCP-001". ANY DEVICE SHOWN WITH DEVICE WIRING TERMINALS CONNECTED DIRECTLY TO THESE SYMBOLS WITH SOLID LINES IS ALSO LOCATED IN MAIN CONTROL PANEL "MCP-001"

## GENERAL NOTES.

1. CLOSELY AND CAREFULLY COORDINATE INSTRUMENT INSTALLATION/LOCATION WITH STRUCTURAL/MECHANICAL DISCIPLINES AND OWNER REPRESENTATIVE.
2. DARK LINEWORK DENOTES PROPOSED EQUIPMENT. LIGHT LINEWORK DENOTES EXISTING EQUIPMENT

## REFERENCE DRAWINGS:

E-CWS-057 – E-CWS-059 – POWER WIRING SCHEMATICS

E-CWS-051 – E-CWS-052 – MCP ELEVATIONS

E-PLC-001 – PLC ARCHITECTURE

E-PLC-002 – E-PLC-004 – PLC I/O WIRING SCHEMATICS

BAR 1 FOOT ORIGINAL DRAWING SCALE 1/2" = 1 FOOT IF NOT ACCORDING

2/21/2005

HARUTUNIAN ENGINEERING INCORPORATED

ENGINEERING AND ENVIRONMENTAL CONSULTANTS
305 EAST HUNTLAND DRIVE SUITE 500
AUSTIN, TEXAS 78752

REUSE OF DOCUMENTS
This document and the ideas and designs incorporated herein as an instrument of professional service has been developed, designed and prepared by Harutunian Engineering, Inc. and is not to be used, in whole or part, for any other project without the written authorization of Water District No. 10 and Harutunian Engineering, Inc. © 2005

HEI
HEI
HEI
FEBRUARY 2005
NONE

TRAVIS COUNTY WATER CONTROL & IMPROVEMENT DISTRICT NO. 10
PUMP STATION NO. 1

ELECTRICAL BUILDING AND EXISTING PUMP STATION
INTERIOR ROOM TEMPERATURE
INSTRUMENT WIRING SCHEMATIC

2002-210 | SHEET 143 | E-IWS-016