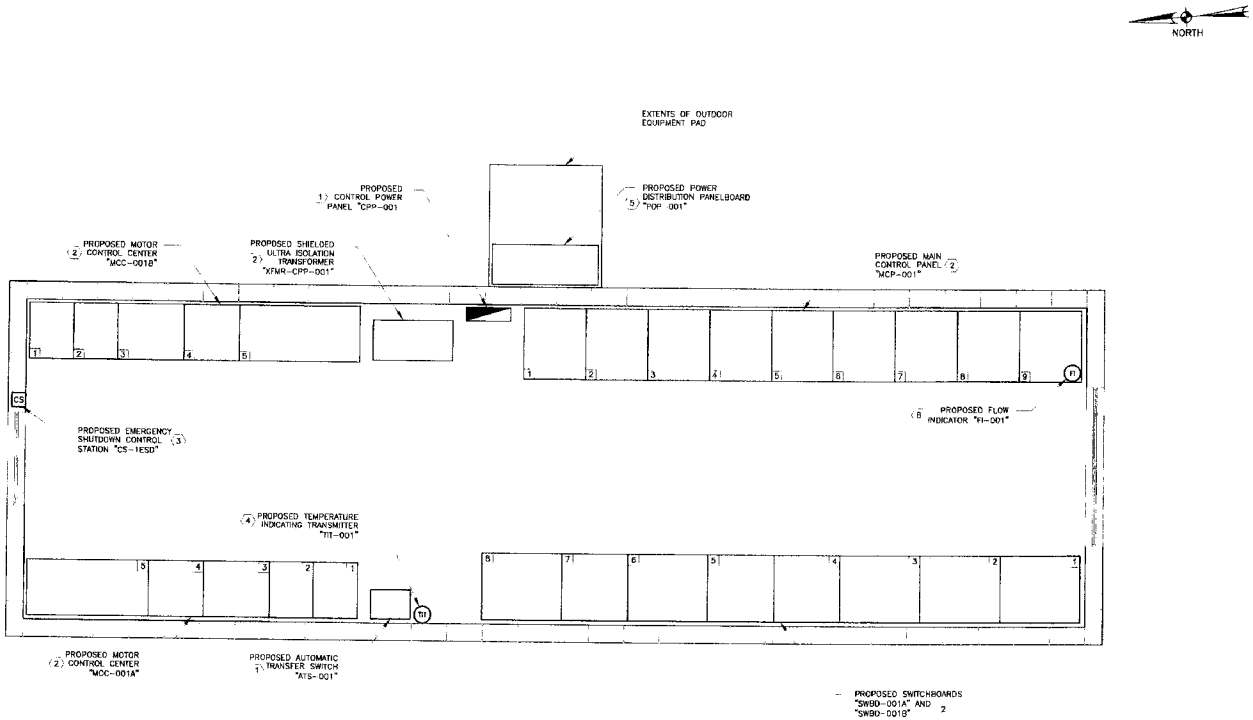

KEY NOTES:

1. MOUNT EQUIPMENT ON WALL ACCORDING TO THE APPLICABLE DETAIL ON DRAWING NO. E-DET-005.
2. INSTALL EQUIPMENT ON CONCRETE EQUIPMENT PAD ACCORDING TO THE APPLICABLE DETAIL ON DRAWING NO. E-DET-005.
3. FURNISH AND INSTALL BREAK-GLASS PUSH BUTTON WITH ONE NORMALLY OPEN AND ONE NORMALLY CLOSED CONTACT AS MANUFACTURED BY ALLEN-BRADLEY (#800T-S6M) OR APPROVED EQUAL MOUNTED ON A FLUSH-MOUNT DIE CAST FACE PLATE AS MANUFACTURED BY ALLEN-BRADLEY (#800T-121) OR APPROVED EQUAL. ATTACH MALLET WITH STAINLESS STEEL SCREWS. FURNISH AND INSTALL PUSHBUTTON LEGEND PLATE READING "PUMP STATION EMERGENCY SHUTDOWN". INSTALL IN A RECESSED DEVICE BOX OF 3-1/2" MINIMUM DEPTH AS MANUFACTURED BY HUBBELL OR APPROVED EQUAL UTILIZING STEEL ADAPTOR PLATE AS MANUFACTURED BY RACO OR APPROVED EQUAL. PROVIDE ALL COMPONENTS REQUIRED FOR A COMPLETE, FUNCTIONAL INSTALLATION AT NO ADDITIONAL COST TO THE OWNER. MAKE ALL FINAL CONNECTIONS PER THE APPLICABLE CONTROL WIRING SCHEMATICS. PROVIDE A SUBMITAL FOR THE ABOVE SPECIFIED COMPONENTS IN ACCORDANCE WITH SPECIFICATION SECTIONS 01300, 01730, AND 17200.
4. INSTALL PER TEMPERATURE INDICATING TRANSMITTER INSTALLATION DETAIL ON DRAWING NO. E-DET-006.
5. FURNISH AND INSTALL ON OUTDOOR EQUIPMENT PAD PER DETAIL ON DRAWING E-DET-005. CLOSELY AND CAREFULLY COORDINATE PAD INSTALLATION WITH ADJACENT ROAD CURB (NOT SHOWN) AND MAKE ALL FINAL CONNECTIONS.
6. INSTALL FLOW INDICATOR ON SOUTH WALL OF ELECTRICAL ROOM ABOVE THE MAIN CONTROL PANEL IN THE APPROXIMATE LOCATION SHOWN HERE PER FLOW INDICATOR INSTALLATION DETAIL ON DRAWING NO. E-DET-008. COORDINATE EXACT LOCATION WITH THE OWNER.

GENERAL NOTES:

1. NOT ALL ELECTRICAL/MECHANICAL/STRUCTURAL/CIVIL COMPONENTS ARE SHOWN ON THIS DRAWING. REFER TO ELECTRICAL/MECHANICAL/STRUCTURAL/CIVIL DRAWINGS, AS APPLICABLE, FOR ADDITIONAL INFORMATION.
2. CONTRACTOR SHALL CLOSELY AND CAREFULLY COORDINATE ROUTE OF PROPOSED CONDUIT/WIRE WITH EXISTING AND PROPOSED CIVIL/MECHANICAL/STRUCTURAL/ELECTRICAL SYSTEMS/COMPONENTS/EQUIPMENT/UTILITIES, ETC.
3. THE LOCATIONS AND SIZES OF EQUIPMENT SHOWN ARE APPROXIMATE. THE CONTRACTOR SHALL FIELD VERIFY CONDITIONS PRIOR TO COMMENCING CONSTRUCTION.
4. THE ACTUAL REQUIRED SIZE OF THE CONDUIT ENTRANCE AREAS FOR ALL EQUIPMENT IS TO BE DETERMINED BY THE EQUIPMENT MANUFACTURER. THE LOCATION AND SIZE OF CONDUIT ENTRANCE AREAS OF MOTOR CONTROL CENTERS, TRANSFORMERS, SWITCHBOARDS, ETC. SHALL BE CLOSELY AND CAREFULLY COORDINATED WITH THE EQUIPMENT MANUFACTURER. REFER TO APPLICABLE CIVIL/STRUCTURAL/ELECTRICAL/ETC. DRAWINGS.
5. THIS DRAWING IS INTENDED TO PROVIDE THE APPROXIMATE LOCATION AND CORRESPONDING EQUIPMENT TAGGING FOR MAJOR PIECES OF EQUIPMENT LOCATED WITHIN THE PROPOSED PUMP STATION ELECTRICAL BUILDING.
6. EQUIPMENT/CONDUIT TAGS/NAMES HAVE BEEN ARBITRARILY ASSIGNED TO AID IN THE DRAWINGS.

REFERENCE DRAWINGS:

E-OL-007 – E-OL-013 – ONE-LINE DIAGRAMS

E-RWS-001 – E-RWS-003 – CONDUIT/WIRE SCHEMATICS

E-FP-005 – E-FP-008 – ELECTRICAL BUILDING FLOOR PLANS

BAR IS 1" ON ORIGINAL DRAWING. IF NOT ONE INCH, ADJUST SCALE ACCORDINGLY

STATE OF TEXAS REGISTERED 2/2/2005

HARUTUNIAN ENGINEERING INCORPORATED

ENGINEERING AND ENVIRONMENTAL CONSULTANTS
305 EAST HUNTLAND DRIVE SUITE 500
AUSTIN, TEXAS 78752

REUSE OF DOCUMENTS

This document and the ideas and designs incorporated herein as an instrument of professional service has been developed, designed and prepared by Harutunian Engineering, Inc. and is not to be used, in whole or part, for any other project without the written authorization of Water District No. 10 and Harutunian Engineering, Inc. ©2005

DESIGNED BY HEI
DRAWN BY HEI
APPROVED BY HEI
FEBRUARY 2005
SCALE 1/2"=1'0"

TRAVIS COUNTY WATER CONTROL & IMPROVEMENT DISTRICT NO. 10
PUMP STATION NO. 1

ELECTRICAL BUILDING
EQUIPMENT ARRANGEMENT
FLOOR PLAN

2002-210 | SHEET 44 | DWG NO. E-FP-004

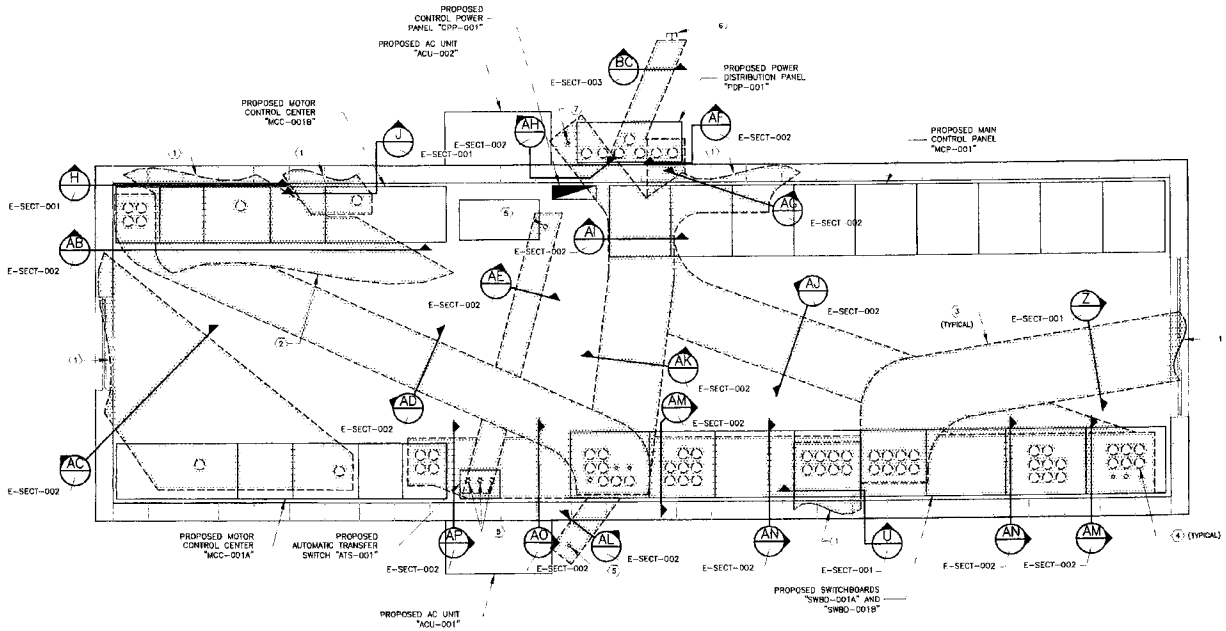

KEY NOTES:

1. REFER TO DRAWING NO. E-SP-006 FOR CONTINUATION OF DUCT BANK.
2. REFER TO DRAWING NO. E-FP-007 FOR CONTINUATION OF DUCT BANK.
3. UNDERGROUND ELECTRICAL DUCT BANK PER APPLICABLE SECTIONS ON DRAWING NOs. E-SECT-001 – E-SECT-004 AND PER APPLICABLE DETAILS ON DRAWING NO. E-DET-011
4. CONDUIT/WIRE PENETRATES FLOOR SLAB AND PROPOSED HOUSEKEEPING PAD AND STUBS UP INTO EQUIPMENT PER APPLICABLE DETAILS ON DRAWING NO. E-DET-008 UNLESS NOTED OTHERWISE.
5. CONDUIT PENETRATES FLOOR SLAB PER APPLICABLE DETAILS ON DRAWING NO. E-DET-004. REFER TO DRAWING NO E-FP-006 FOR CONTINUATION OF CONDUIT
6. STUB-OUT AND CAP-OFF CONDUIT FOR FUTURE USE PER THE DETAILS ON DRAWING NO. E-DET-011
7. STUB-UP CONDUIT PER OUTDOOR STUB-UP DETAIL ON DRAWING NO. E-DET-004.

GENERAL NOTES:

1. NOT ALL ELECTRICAL/MECHANICAL/STRUCTURAL/CIVIL COMPONENTS ARE SHOWN ON THIS DRAWING. REFER TO ELECTRICAL/MECHANICAL/STRUCTURAL/CIVIL DRAWINGS, AS APPLICABLE, FOR ADDITIONAL INFORMATION.
2. CONTRACTOR SHALL CLOSELY AND CAREFULLY COORDINATE ROUTE OF PROPOSED UNDERGROUND ELECTRICAL DUCT BANKS WITH EXISTING AND PROPOSED CIVIL/MECHANICAL/STRUCTURAL/ELECTRICAL SYSTEMS/COMPONENTS/EQUIPMENT /UTILITIES, ETC.
3. THE LOCATIONS AND SIZES OF EQUIPMENT SHOWN ARE APPROXIMATE. THE CONTRACTOR SHALL FIELD VERIFY CONDITIONS PRIOR TO COMMENCING CONSTRUCTION.
4. THE ACTUAL REQUIRED SIZE OF THE CONDUIT ENTRANCE AREAS FOR ALL EQUIPMENT IS TO BE DETERMINED BY THE EQUIPMENT MANUFACTURER. THE LOCATION AND SIZE OF CONDUIT ENTRANCE AREAS OF MOTOR CONTROL CENTERS, TRANSFORMERS, SWITCHBOARDS, ETC. SHALL BE CLOSELY AND CAREFULLY COORDINATED WITH THE EQUIPMENT MANUFACTURER. REFER TO APPLICABLE CIVIL/STRUCTURAL/ELECTRICAL/ETC. DRAWINGS.
5. THIS DRAWING IS INTENDED TO SHOW THE MINIMUM POWER CONDUIT/WIRE REQUIRED TO INTERCONNECT MAJOR PIECES OF EQUIPMENT LOCATED WITHIN THE PROPOSED PUMP STATION ELECTRICAL BUILDING. ALSO REFER TO INSTRUMENTATION AND CONTROL DUCTBANK DRAWINGS FOR POSSIBLE ADDITIONAL CONDUIT/WIRE TO BE INCLUDED IN CORRESPONDING DUCTBANKS.
6. EQUIPMENT/CONDUIT TAGS/NAMES HAVE BEEN ARBITRARILY ASSIGNED TO AID IN THE DRAWINGS.

REFERENCE DRAWINGS:

E-OL-007 – E-OL-013 – ONE-LINE DIAGRAMS
E-FP-004 – EQUIPMENT ARRANGEMENT
E-FP-006 – ABOVEGROUND POWER FLOOR PLAN
E-FP-007 – I/C FLOOR PLAN
E-SP-006 – OVERALL SITE PLAN
E-SECT-001 – E-SECT-004 – DUCTBANK SECTIONS
E-RWS-001 – E-RWS-003 – CONDUIT/WIRE SCHEMATICS
E-CS-001 – E-CS-002 – CONDUIT/WIRE SCHEDULE

BAR LENGTH ON ORIGINAL DRAWING EQUALS ONE INCH ADJUST SCALE ACCORDINGLY

STATE OF TEXAS REGISTERED PROFESSIONAL ENGINEER 2/21/2005

HARUTUNIAN ENGINEERING INCORPORATED
ENGINEERING AND ENVIRONMENTAL CONSULTANTS
305 EAST HUNTLAND DRIVE SUITE 500
AUSTIN, TEXAS 78752

REUSE OF DOCUMENTS
This document and the ideas and designs incorporated herein as an instrument of professional service has been developed, designed and prepared by Harutunian Engineering, Inc. and is not to be used, in whole or part, for any other project without the written authorization of Water District No. 10 and Harutunian Engineering, Inc. © 2005

DATE: 2/21/05
HEI
HEI
HEI
GRAPHIC DATE
FEBRUARY 2005
SCALE 1/2"=1'0"

TRAVIS COUNTY WATER CONTROL & IMPROVEMENT DISTRICT NO. 10
PUMP STATION NO. 1

ELECTRICAL BUILDING
UNDERGROUND POWER
FLOOR PLAN

JOB NO. 2002-210 | SHEET 45 | DWG NO. E-FP-005

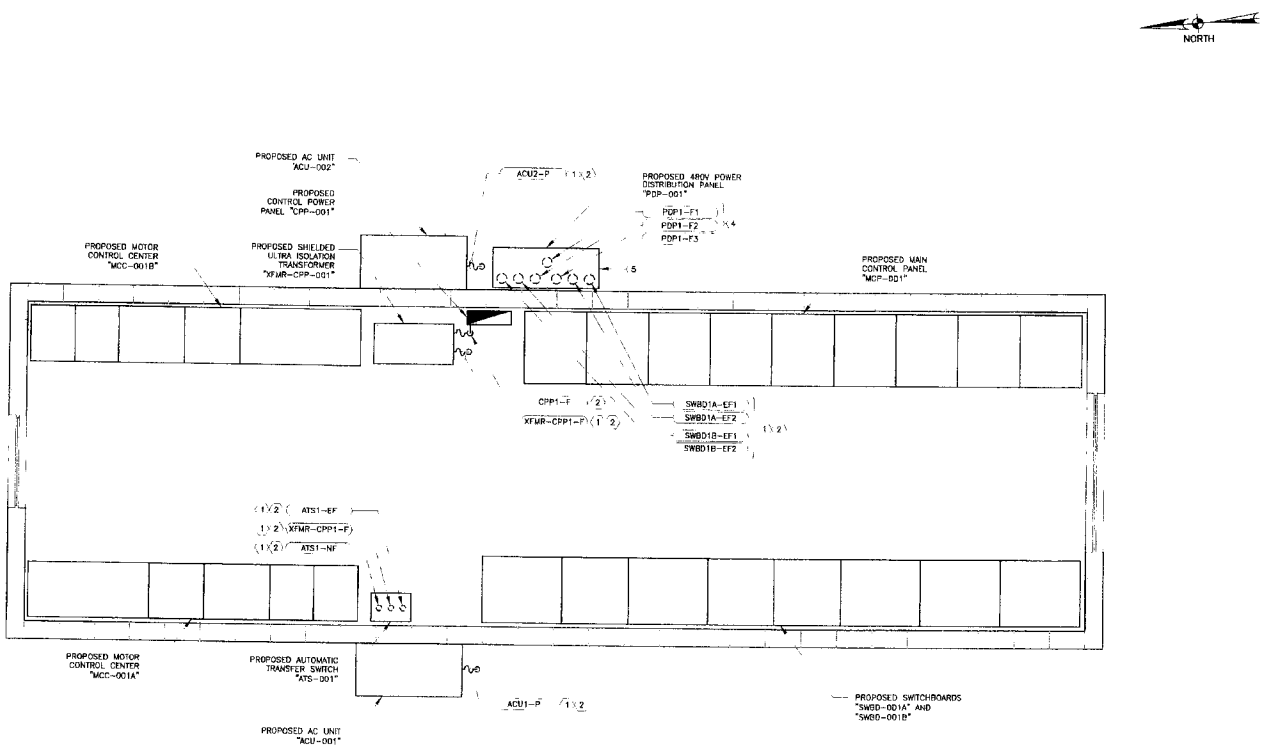

KEY NOTES:

1. CONDUIT STUBS UP FROM UNDERGROUND DUCT BANK SYSTEM PER APPLICABLE DETAILS ON DRAWING NO. E-DET-004. REFER TO DRAWING NO. E-FP-005 AND TO APPLICABLE SECTIONS ON DRAWING NO. E-SECT-002 FOR CONTINUATION.
2. CONDUIT TERMINATES AT EQUIPMENT PER APPLICABLE DETAILS ON DRAWING NO. E-DET-006. SUPPORT CONDUIT PER APPLICABLE DETAILS ON DRAWING NO. E-DET-005. MAKE ALL FINAL CONNECTIONS PER THE APPLICABLE SCHEMATICS AND ONE-LINE DIAGRAMS.
3. CONDUITS ENTERING LIGHTING PANEL MUST NOT INTRUDE INTO TRANSFORMER WORKING CLEARANCE AS REQUIRED BY THE NATIONAL ELECTRIC CODE.
4. CONDUIT STUBS-UP AND IS CAPPED OFF FOR FUTURE USE PER THE DETAILS ON DRAWING NO. E-DET-004.
5. FURNISH AND INSTALL THREE 4" INSULATING BUSHINGS AS MANUFACTURED BY "O-Z/GEDNEY" CATALOG #ABB-400 AND THREE POLYETHYLENE CONDUIT/BUSHING PLUGS AS MANUFACTURED BY "O-Z/GEDNEY" CATALOG #PPC-400 OR APPROVED EQUALS. ALSO FURNISH THREE SPARE PLUGS. INSTALL BUSHINGS CENTERED ON THE SOUTH SIDE OF POWER DISTRIBUTION PANEL "PDP-001" IN A VERTICAL ARRANGEMENT 10" ON CENTER WITH THE CENTER OF THE BOTTOM BUSHING 12" FROM THE BOTTOM OF THE ENCLOSURE. PROVIDE A SUBMITTAL FOR THE ABOVE SPECIFIED COMPONENTS IN ACCORDANCE WITH SPECIFICATION SECTIONS 01300, 01730, AND 16150.

GENERAL NOTES:

1. NOT ALL ELECTRICAL/MECHANICAL/STRUCTURAL/CIVIL COMPONENTS ARE SHOWN ON THIS DRAWING. REFER TO ELECTRICAL/MECHANICAL/STRUCTURAL/CIVIL DRAWINGS, AS APPLICABLE, FOR ADDITIONAL INFORMATION
2. CONTRACTOR SHALL CLOSELY AND CAREFULLY COORDINATE ROUTE OF PROPOSED CONDUIT/WIRE WITH EXISTING AND PROPOSED CIVIL/MECHANICAL/STRUCTURAL/ELECTRICAL SYSTEMS/COMPONENTS/EQUIPMENT/UTILITIES, ETC.
3. THE LOCATIONS AND SIZES OF EQUIPMENT SHOWN ARE APPROXIMATE. THE CONTRACTOR SHALL FIELD VERIFY CONDITIONS PRIOR TO COMMENCING CONSTRUCTION.
4. THE ACTUAL REQUIRED SIZE OF THE CONDUIT ENTRANCE AREAS FOR ALL EQUIPMENT IS TO BE DETERMINED BY THE EQUIPMENT MANUFACTURER. THE LOCATION AND SIZE OF CONDUIT ENTRANCE AREAS OF MOTOR CONTROL CENTERS, TRANSFORMERS, SWITCHBOARDS, ETC. SHALL BE CLOSELY AND CAREFULLY COORDINATED WITH THE EQUIPMENT MANUFACTURER. REFER TO APPLICABLE CIVIL/STRUCTURAL/ELECTRICAL/ETC. DRAWINGS.
5. THIS DRAWING IS INTENDED TO SHOW THE MINIMUM POWER CONDUIT/WIRE REQUIRED TO INTERCONNECT MAJOR PIECES OF EQUIPMENT LOCATED WITHIN THE PROPOSED PUMP STATION ELECTRICAL BUILDING. ALSO REFER TO INSTRUMENTATION AND CONTROL DRAWINGS FOR POSSIBLE ADDITIONAL CONDUIT/WIRE REQUIRED.
6. EQUIPMENT/CONDUIT TAGS/NAMES HAVE BEEN ARBITRARILY ASSIGNED TO AID IN THE DRAWINGS.

REFERENCE DRAWINGS:

E-OL-007 – E-OL-013 – ONE-LINE DIAGRAMS
E-FP-004 – EQUIPMENT ARRANGEMENT
E-FP-005 – UNDERGROUND POWER FLOOR PLAN
E-FP-007 – I/C FLOOR PLAN
E-SP-006 – OVERALL SITE PLAN
E-SECT-001 – E-SECT-004 – DUCTBANK SECTIONS
E-RWS-001 – E-RWS-003 – CONDUIT/WIRE SCHEMATICS
E-CS-001 – E-CS-002 – CONDUIT/WIRE SCHEDULE

K. Anthony Tucker
STATE OF TEXAS
KAMPUS TUCKER
REGISTERED PROFESSIONAL ENGINEER
2/21/2005

HARUTUNIAN ENGINEERING INCORPORATED
ENGINEERING AND ENVIRONMENTAL CONSULTANTS
305 EAST HUNTLAND DRIVE SUITE 500
AUSTIN, TEXAS 78752

REUSE OF DOCUMENTS
This document and the ideas and designs incorporated herein as an instrument of professional service has been developed, designed and prepared by Harutunian Engineering, Inc. and is not to be used, in whole or part, for any other project without the written authorization of Water District No. 10 and Harutunian Engineering, Inc. © 2005

HEI
HEI
HEI
FEBRUARY 2005
1/2"=1'-0"

TRAVIS COUNTY WATER CONTROL & IMPROVEMENT DISTRICT NO. 10
PUMP STATION NO 1

ELECTRICAL BUILDING
ABOVEGROUND POWER
FLOOR PLAN

2002-210 | SHEET 46 | E-FP-006

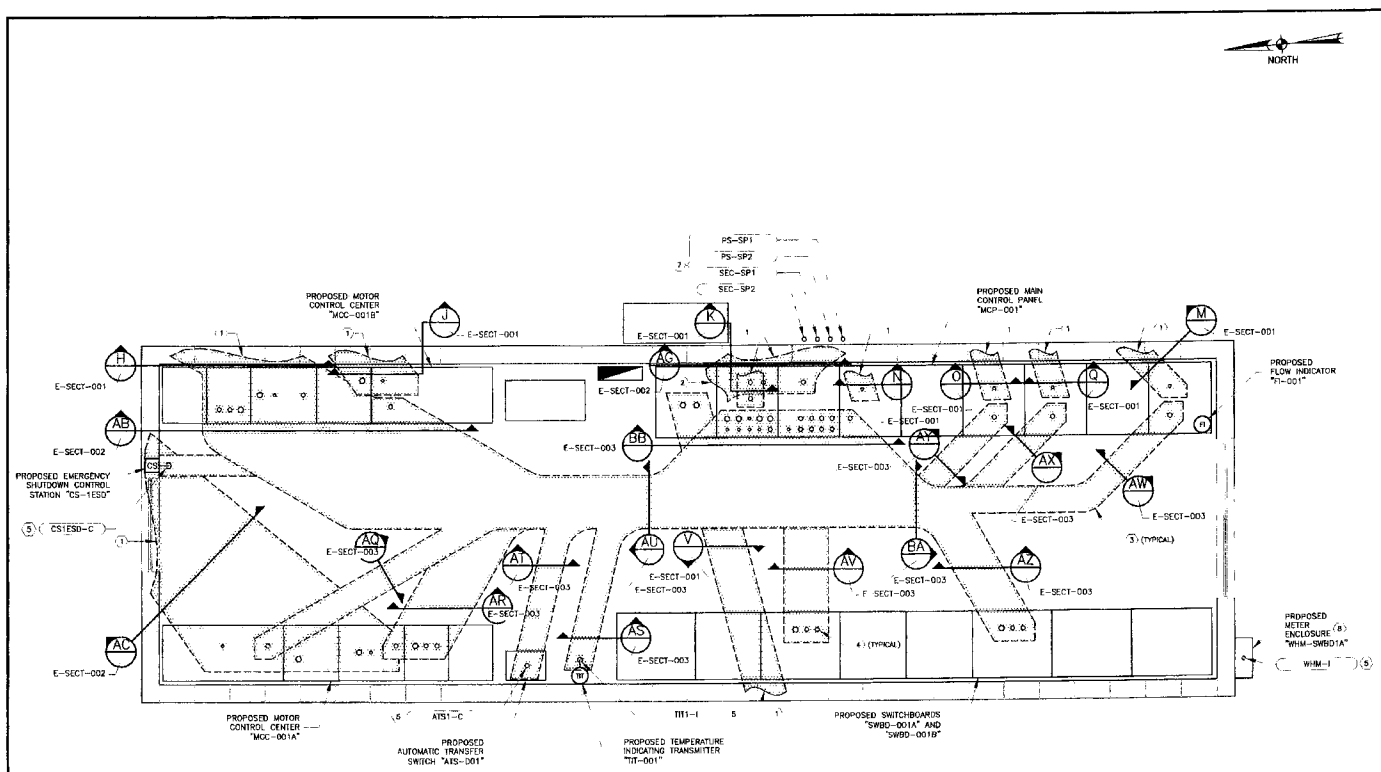

KEY NOTES.

1. REFER TO DRAWING NO. E-SP-008 FOR CONTINUATION OF DUCT BANK.
2. REFER TO DRAWING NO. E-FP-005 FOR CONTINUATION OF DUCT BANK.
3. UNDERGROUND ELECTRICAL DUCT BANK PER APPLICABLE SECTIONS ON DRAWING NOs. E-SECT-001 - E-SECT-004 AND PER APPLICABLE DETAILS ON DRAWING NO. E-DET-011
4. CONDUIT/WIRE PENETRATES FLOOR SLAB AND PROPOSED HOUSEKEEPING PAD AND STUBS UP INTO EQUIPMENT PER APPLICABLE DETAILS ON DRAWING NO. E-DET-008 UNLESS NOTED OTHERWISE.
5. CONDUIT PENETRATES FLOOR SLAB PER APPLICABLE DETAILS ON DRAWING NO E-DET-004. SECURE EXPOSED CONDUIT PER APPLICABLE DETAILS ON DRAWING NO. E-DET-003.
6. INSTALL TEMPERATURE TRANSMITTER PER THE TEMPERATURE TRANSMITTER INSTALLATION DETAIL ON DRAWING NO E-DET-006.
7. PROPOSED EMPTY SPARE CONDUITS STUBBED UP AND CAPPED PER APPLICABLE DETAILS ON DRAWING NO. E-DET-004.
8. PROCURE WATT-HOUR METER ENCLOSURE FROM AUSTIN ENERGY AND INSTALL PER THE REQUIREMENTS OF AUSTIN ENERGY FURNISH AND INSTALL CONDUIT BETWEEN TRANSFORMER AND METER ENCLOSURE PER THE REQUIREMENTS OF AUSTIN ENERGY AUSTIN ENERGY SHALL FURNISH AND INSTALL THE WATT-HOUR METER AND INTERCONNECT WIRING BETWEEN THE PROPOSED SERVICE TRANSFORMER AND WATT-HOUR METER. CLOSELY AND CAREFULLY COORDINATE REQUIREMENTS/INSTALLATION OF METER CAN/ENCLOSURE AND ALL OF ITS COMPONENTS WITH AUSTIN ENERGY

GENERAL NOTES.

1. NOT ALL ELECTRICAL/MECHANICAL/STRUCTURAL/CIVIL COMPONENTS ARE SHOWN ON THIS DRAWING. REFER TO ELECTRICAL/MECHANICAL/STRUCTURAL/CIVIL DRAWINGS, AS APPLICABLE, FOR ADDITIONAL INFORMATION.
2. CONTRACTOR SHALL CLOSELY AND CAREFULLY COORDINATE ROUTE OF PROPOSED UNDERGROUND ELECTRICAL DUCT BANKS WITH EXISTING AND PROPOSED CIVIL/MECHANICAL/STRUCTURAL/ELECTRICAL SYSTEMS/COMPONENTS/EQUIPMENT/UTILITIES, ETC.
3. THE LOCATIONS AND SIZES OF EQUIPMENT SHOWN ARE APPROXIMATE. THE CONTRACTOR SHALL FIELD VERIFY CONDITIONS PRIOR TO COMMENCING CONSTRUCTION.
4. THE ACTUAL REQUIRED SIZE OF THE CONDUIT ENTRANCE AREAS FOR ALL EQUIPMENT IS TO BE DETERMINED BY THE EQUIPMENT MANUFACTURER. THE LOCATION AND SIZE OF CONDUIT ENTRANCE AREAS OF MOTOR CONTROL CENTERS, TRANSFORMERS, SWITCHBOARDS, ETC. SHALL BE CLOSELY AND CAREFULLY COORDINATED WITH THE EQUIPMENT MANUFACTURER. REFER TO APPLICABLE CIVIL/STRUCTURAL/ELECTRICAL/ETC. DRAWINGS.
5. THIS DRAWING IS INTENDED TO SHOW THE MINIMUM INSTRUMENTATION AND CONTROL CONDUIT/WIRE REQUIRED TO INTERCONNECT MAJOR PIECES OF EQUIPMENT LOCATED WITHIN THE PROPOSED PUMP STATION ELECTRICAL BUILDING. ALSO REFER TO POWER DUCTBANK DRAWINGS FOR POSSIBLE ADDITIONAL CONDUIT/WIRE TO BE INCLUDED IN COMBINED DUCTBANKS.
6. EQUIPMENT/CONDUIT TAGS/NAMES HAVE BEEN ARBITRARILY ASSIGNED TO AID IN THE DRAWINGS.

REFERENCE DRAWINGS.

E-OL-007 - E-OL-013 - ONE-LINE DIAGRAMS
E-FP-004 - EQUIPMENT ARRANGEMENT
E-FP-005 - UNDERGROUND POWER FLOOR PLAN
E-FP-006 - ABOVEGROUND POWER FLOOR PLAN
E-SP-008 - OVERALL SITE PLAN
E-SECT-001 - E-SECT-004 - DUCTBANK SECTIONS
E-RWS-001 - E-RWS-003 - CONDUIT/WIRE SCHEMATICS
E-CS-001 - E-CS-002 - CONDUIT/WIRE SCHEDULE

HARUTUNIAN ENGINEERING INCORPORATED
ENGINEERING AND ENVIRONMENTAL CONSULTANTS
305 EAST HUNTLAND DRIVE SUITE 500
AUSTIN, TEXAS 78752

REUSE OF DOCUMENTS
This document and the ideas and designs incorporated herein as an instrument of professional service has been developed, designed and prepared by Harutunian Engineering, Inc. and is not to be used, in whole or part, for any other project without the written authorization of Water District No. 10 and Harutunian Engineering, Inc. © 2005

HEI
HEI
HEI
FEBRUARY 2005
1/2"=1'-0"

TRAVIS COUNTY WATER CONTROL & IMPROVEMENT DISTRICT NO 10
PUMP STATION NO 1

ELECTRICAL BUILDING
INSTRUMENTATION AND CONTROLS
FLOOR PLAN

JOB NO 2002-210 | SHEET 47 | DWG E-FP-007

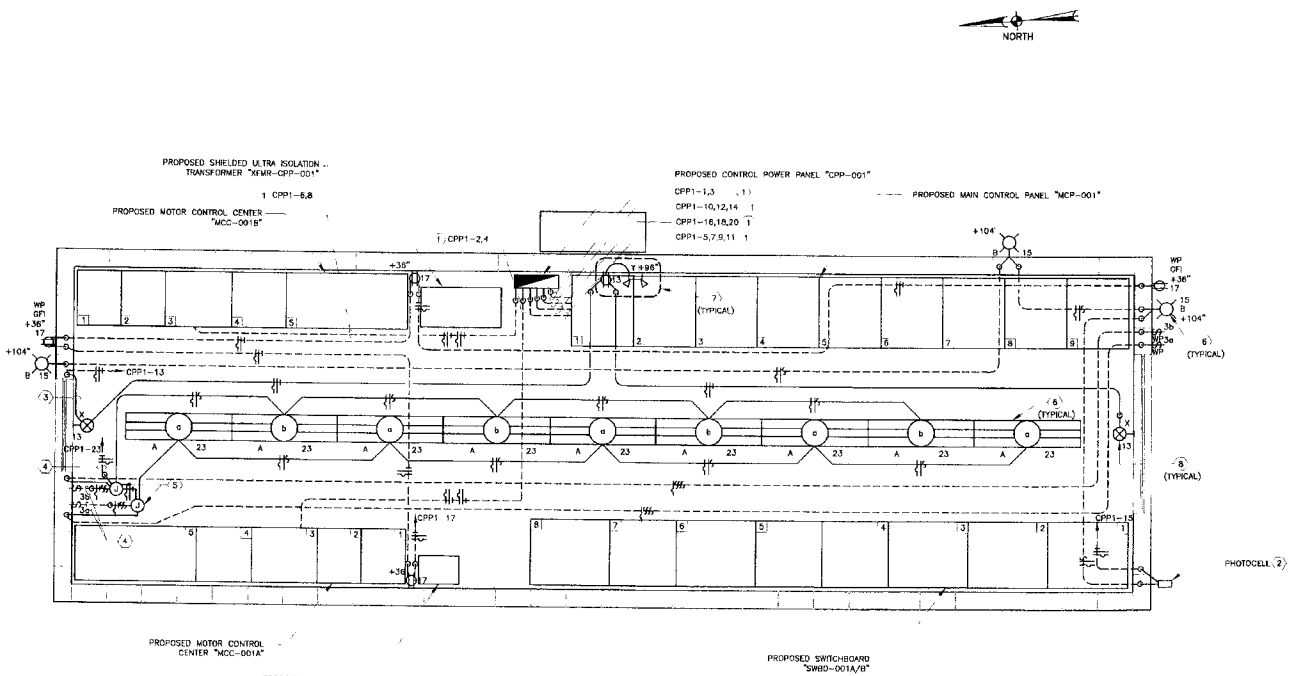

KEY NOTES.

(1) CONDUIT/WIRE ROUTES TO/FROM CONTROL POWER PANEL ALONG WALL AND UNDER SLAB TO/FROM MAIN CONTROL PANEL/MOTOR CONTROL CENTER. STUB CONDUIT/WIRE INTO MAIN CONTROL PANEL ACCORDING TO DETAIL ON DRAWING NO. E-DET-008. REFER TO PANEL SCHEDULE FOR CONDUIT/WIRE REQUIREMENTS.

(2) MOUNT PHOTOCELL ON TYPE FS BOX AND MOUNT JUST BELOW ROOF GABLE END.

(3) CONDUIT/WIRE ROUTES TO/FROM EMERGENCY EXIT LIGHT ALONG NORTH WALL EXPOSED ABOVE DOOR, TURNS AND PENETRATES WALL, AND ROUTES DOWN THROUGH THE INSIDE OF WALL. CONDUIT/WIRE CONTINUES ROUTING UNDERGROUND AND STUBS UP TO THE PANELBOARD.

(4) CONDUIT/WIRE ROUTES TO/FROM JUNCTION BOX DOWN THROUGH THE INSIDE OF THE WALL TO THE PROPOSED SWITCH.

(5) JUNCTION BOX LOCATED ON AND NEAR THE TOP OF THE NORTH WALL OF THE ELECTRICAL BUILDING.

(6) FURNISH AND INSTALL LIGHTING FIXTURE PER THE DETAILS ON DRAWING E-DET-001

(7) FURNISH AND INSTALL LIGHTING FIXTURE WITH DEDICATED CONVENIENCE RECEPTACLE PER THE DETAILS SHOWN ON DRAWING E-DET-002.

(8) FURNISH AND INSTALL LIGHTING FIXTURE PER THE DETAILS ON DRAWING E-DET-002.

GENERAL NOTES.

1. NOT ALL ELECTRICAL/MECHANICAL/STRUCTURAL/CIVIL COMPONENTS ARE SHOWN ON THIS DRAWING. REFER TO ELECTRICAL/MECHANICAL/STRUCTURAL/CIVIL DRAWINGS, AS APPLICABLE, FOR ADDITIONAL INFORMATION.
2. CONTRACTOR SHALL CLOSELY AND CAREFULLY COORDINATE ROUTE OF PROPOSED CONDUIT/WIRE WITH PROPOSED CIVIL/MECHANICAL/STRUCTURAL/ELECTRICAL SYSTEMS/COMPONENTS/EQUIPMENT/UTILITIES, ETC.
3. THE LOCATIONS AND SIZES OF EQUIPMENT SHOWN ARE APPROXIMATE. THE CONTRACTOR SHALL FIELD VERIFY CONDITIONS PRIOR TO COMMENCING CONSTRUCTION.
4. THE ACTUAL REQUIRED SIZE OF THE CONDUIT ENTRANCE AREAS FOR ALL EQUIPMENT IS TO BE DETERMINED BY THE EQUIPMENT MANUFACTURER. THE LOCATION AND SIZE OF CONDUIT ENTRANCE AREAS OF MOTOR CONTROL CENTERS, TRANSFORMERS, SWITCHBOARDS, ETC. SHALL BE CLOSELY AND CAREFULLY COORDINATED WITH THE EQUIPMENT MANUFACTURER. REFER TO APPLICABLE CIVIL/STRUCTURAL/ELECTRICAL/ETC. DRAWINGS.
5. THIS DRAWING IS INTENDED TO PROVIDE THE APPROXIMATE LOCATION AND CORRESPONDING EQUIPMENT TAGGING FOR MAJOR PIECES OF EQUIPMENT LOCATED WITHIN THE PROPOSED PUMP STATION ELECTRICAL BUILDING.
6. EQUIPMENT/CONDUIT TAGS/NAMES HAVE BEEN ARBITRARILY ASSIGNED TO AID IN THE DRAWINGS.
7. THE CONDUIT/WIRE ROUTING SHOWN HEREIN IS SCHEMATIC. ALL CONDUITS ROUTED UNDER THE SLAB SHALL BE GROUPED INTO DUCT BANK SYSTEMS CONSISTING OF CONDUITS SET AND SPACED IN REINFORCED CONCRETE. ALSO REFER TO DRAWINGS NO. E-DET-004 AND E-DET-011 FOR TYPICAL CONSTRUCTION DETAILS.

REFERENCE DRAWINGS.

E-OL-007 - E-OL-013 - ONE-LINE DIAGRAMS

E-RWS-001 - E-RWS-003 - CONDUIT/WIRE SCHEMATICS

E-PNLS-001 - PANEL SCHEDULES

BAR LENGTH 2" ORIGINAL DRAWING FOLDER DETERMINE ADDITIONAL NON-PRINTING

STATE OF TEXAS REGISTERED PROFESSIONAL ENGINEER 2/21/2005

HARUTUNIAN ENGINEERING INCORPORATED
ENGINEERING AND ENVIRONMENTAL CONSULTANTS
305 EAST HUNTLAND DRIVE SUITE 500
AUSTIN, TEXAS 78752

REUSE OF DOCUMENTS
This document and the ideas and designs incorporated herein as an instrument of professional service has been developed, designed and prepared by Harutunian Engineering, Inc. and is not to be used, in whole or part, for any other project without the written authorization of Water District No. 10 and Harutunian Engineering, Inc. © 2005

DESIGNED HEI
DRAWN HEI
REVIEWED HEI
FEBRUARY 2005
SCALE 1/2"=1'0"

TRAVIS COUNTY WATER CONTROL & IMPROVEMENT DISTRICT NO 10
PUMP STATION NO 1

ELECTRICAL BUILDING
LIGHTING AND AUXILIARY POWER
FLOOR PLAN

PROJECT 2002-210 | SHEET 46 | DWG. NO. E-FP-008

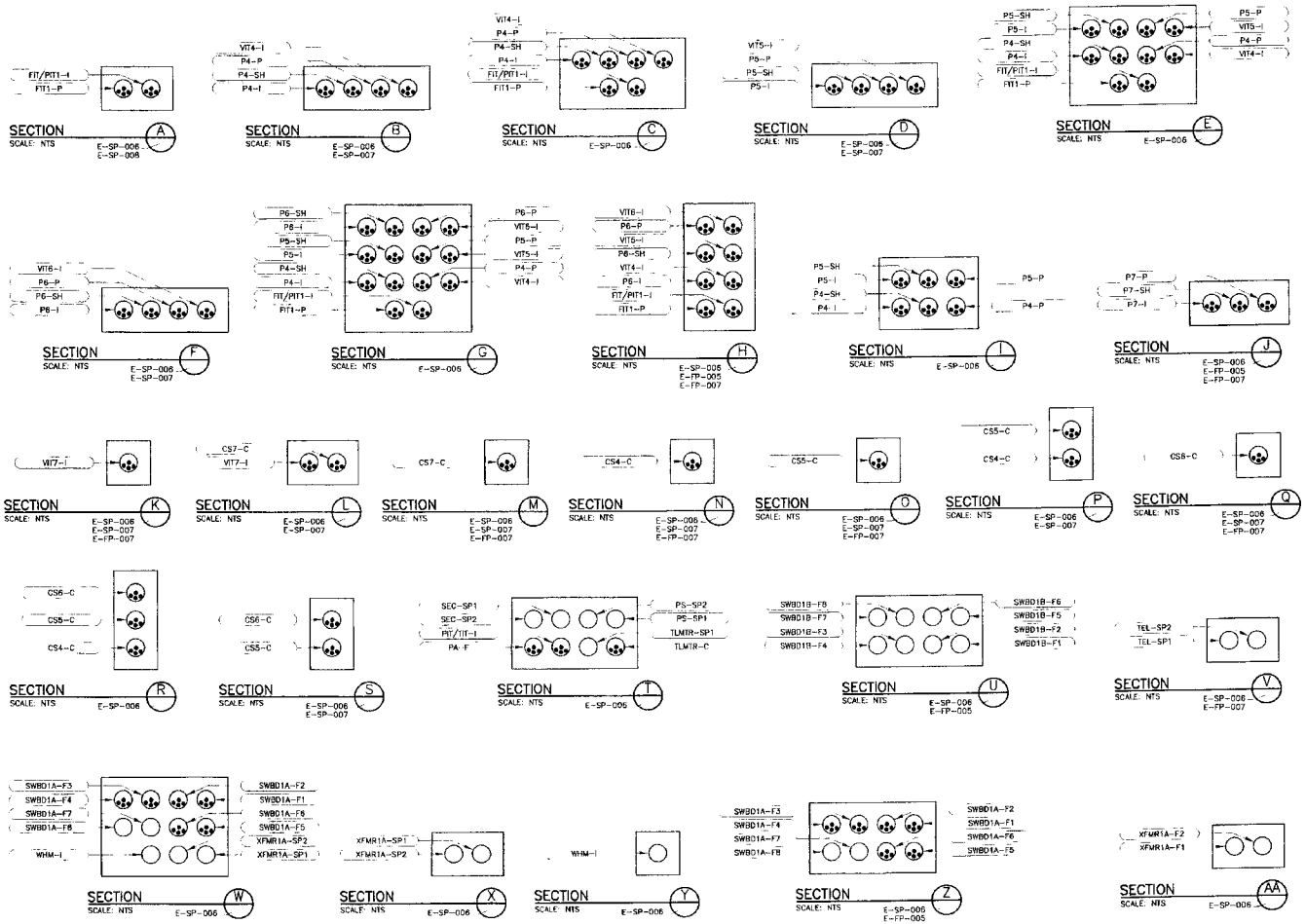

GENERAL NOTES.

1. CONTRACTOR SHALL CLOSELY AND CAREFULLY COORDINATE ROUTE OF PROPOSED CONDUIT/WIRE WITH EXISTING AND PROPOSED CIVIL/MECHANICAL/STRUCTURAL/ELECTRICAL SYSTEMS/COMPONENTS/EQUIPMENT/UTILITIES, ETC.
2. THE ACTUAL REQUIRED SIZE OF THE CONDUIT ENTRANCE AREAS FOR ALL EQUIPMENT IS TO BE DETERMINED BY THE EQUIPMENT MANUFACTURER. THE LOCATION AND SIZE OF CONDUIT ENTRANCE AREAS OF MOTOR CONTROL CENTERS, TRANSFORMERS, SWITCHBOARDS, ETC. SHALL BE CLOSELY AND CAREFULLY COORDINATED WITH THE EQUIPMENT MANUFACTURER. REFER TO APPLICABLE CIVIL/STRUCTURAL/ELECTRICAL/ETC. DRAWINGS.
3. THIS DRAWING IS INTENDED TO SHOW THE MINIMUM CONDUIT/WIRE REQUIRED WITHIN THE APPLICABLE POWER DUCTBANKS INDICATED. THE ACTUAL ARRANGEMENT OF CONDUIT/WIRE MAY VARY, FROM THAT WHICH IS SHOWN. ALSO REFER TO I&C DUCTBANK DRAWINGS FOR POSSIBLE ADDITIONAL CONDUIT/WIRE TO BE INCLUDED IN COMBINED DUCTBANKS.
4. EQUIPMENT/CONDUIT TAGS/NAMES HAVE BEEN ARBITRARILY ASSIGNED TO AID IN THE DRAWINGS.
5. ALL DUCT BANK SYSTEMS CONSIST OF CONDUITS SET AND SPACED IN REINFORCED CONCRETE. REFER TO DRAWINGS NO. E-DET-004 AND E-DET-011 FOR TYPICAL CONSTRUCTION DETAILS.
6. REFER TO DRAWING NO. E-SECT-004 FOR DUCTBANK DIMENSIONS.

REFERENCE DRAWINGS.

E-OL-007 – E-OL-013 – ONE-LINE DIAGRAMS

E-FP-004 – E-FP-008 – ELECTRICAL BUILDING FLOOR PLANS

E-SP-006 – OVERALL SITE PLAN–RENOVATION

E-SECT-001 – E SECT-004 – DUCTBANK SECTIONS

E-RWS-001 – E-RWS-003 – CONDUIT/WIRE SCHEMATICS

E-CS-001 – E-CS-002 – CONDUIT/WIRE SCHEDULE

BAR LENGTH ON ORIGINAL DRAWING COMES ONE INCH ABOUT REAL AT PRIMARY

STATE OF TEXAS REGISTERED PROFESSIONAL ENGINEER 2/21/2005

HARUTUNIAN ENGINEERING INCORPORATED
ENGINEERING AND ENVIRONMENTAL CONSULTANTS
305 EAST HUNTLAND DRIVE SUITE 520
AUSTIN, TEXAS 78752

REUSE OF DOCUMENTS
This document and the ideas and designs incorporated herein as an instrument of professional service has been developed, designed and prepared by Harutunian Engineering, Inc. and is not to be used, in whole or part, for any other project without the written authorization of Water District No. 10 and Harutunian Engineering, Inc. © 2005

HEI
HEI
HEI
FEBRUARY 2005
NONE

TRAVIS COUNTY WATER CONTROL & IMPROVEMENT DISTRICT NO. 10
PUMP STATION NO. 1

DUCT BANK SECTIONS
(SHEET 1 OF 4)

2002-210 | SHEET 49 | E-SECT-001

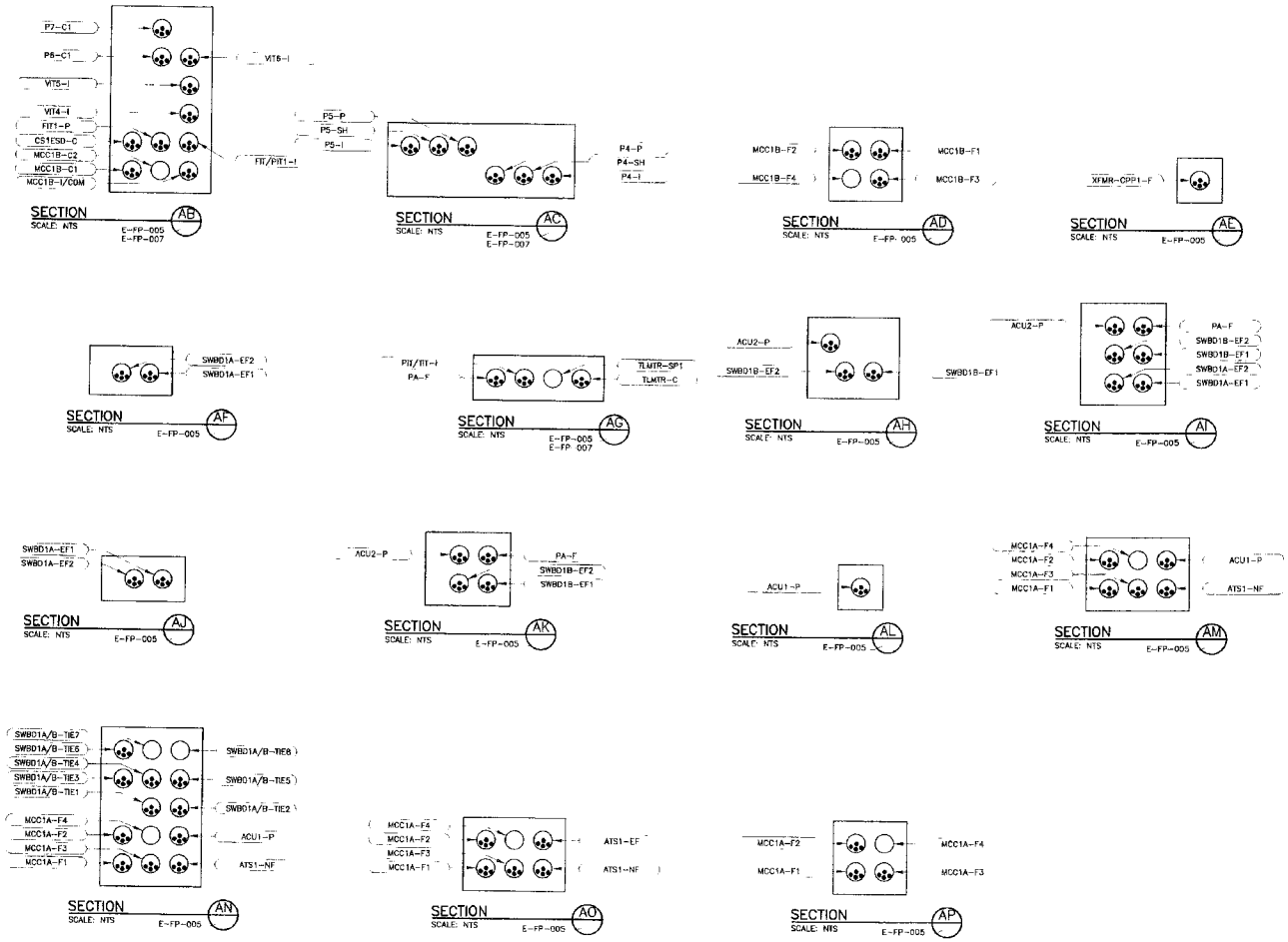

GENERAL NOTES:

1. CONTRACTOR SHALL CLOSELY AND CAREFULLY COORDINATE ROUTE OF PROPOSED CONDUIT/WIRE WITH EXISTING AND PROPOSED CIVIL/MECHANICAL/STRUCTURAL/ELECTRICAL SYSTEMS/COMPONENTS/EQUIPMENT/UTILITIES, ETC.
2. THE ACTUAL REQUIRED SIZE OF THE CONDUIT ENTRANCE AREAS FOR ALL EQUIPMENT IS TO BE DETERMINED BY THE EQUIPMENT MANUFACTURER. THE LOCATION AND SIZE OF CONDUIT ENTRANCE AREAS OF MOTOR CONTROL CENTERS, TRANSFORMERS, SWITCHBOARDS, ETC. SHALL BE CLOSELY AND CAREFULLY COORDINATED WITH THE EQUIPMENT MANUFACTURER. REFER TO APPLICABLE CIVIL/STRUCTURAL/ELECTRICAL/ETC. DRAWINGS.
3. THIS DRAWING IS INTENDED TO SHOW THE MINIMUM CONDUIT/WIRE REQUIRED WITHIN THE APPLICABLE POWER DUCTBANKS INDICATED. THE ACTUAL ARRANGEMENT OF CONDUIT/WIRE MAY VARY FROM THAT WHICH IS SHOWN. ALSO REFER TO I&C DUCTBANK DRAWINGS FOR POSSIBLE ADDITIONAL CONDUIT/WIRE TO BE INCLUDED IN COMBINED DUCTBANKS.
4. EQUIPMENT/CONDUIT TAGS/NAMES HAVE BEEN ARBITRARILY ASSIGNED TO AID IN THE DRAWINGS.
5. ALL DUCT BANK SYSTEMS CONSIST OF CONDUITS SET AND SPACED IN REINFORCED CONCRETE. REFER TO DRAWINGS NO. E-DET-004 AND E-DET-011 FOR TYPICAL CONSTRUCTION DETAILS.
6. REFER TO DRAWING NO. E-SECT-004 FOR DUCTBANK DIMENSIONS.

REFERENCE DRAWINGS:

E-OL-007 – E-OL-013 – ONE-LINE DIAGRAMS

E-FP-004 – E-FP-008 – ELECTRICAL BUILDING FLOOR PLANS

E-SP-006 – OVERALL SITE PLAN–RENOVATION

E-SECT-001 – E-SECT-004 – DUCTBANK SECTIONS

E-RWS-001 – E-RWS-003 – CONDUIT/WIRE SCHEMATICS

E-CS-001 – E-CS-002 – CONDUIT/WIRE SCHEDULE

HARUTUNIAN ENGINEERING INCORPORATED
ENGINEERING AND ENVIRONMENTAL CONSULTANTS
305 EAST HUNTLAND DRIVE SUITE 500
AUSTIN, TEXAS 78752

REUSE OF DOCUMENTS

This document and the ideas and designs incorporated herein as an instrument of professional service has been developed, designed and prepared by Harutunian Engineering, Inc. and is not to be used, in whole or part, for any other project without the written authorization of Water District No. 10 and Harutunian Engineering, Inc. © 2005

HEI
HEI
HEI
FEBRUARY 2005
NONE

TRAVIS COUNTY WATER CONTROL & IMPROVEMENT DISTRICT NO. 10
PUMP STATION NO. 1

DUCT BANK SECTIONS
(SHEET 2 OF 4)

2002-210 | SHEET 50 | E-SECT-002

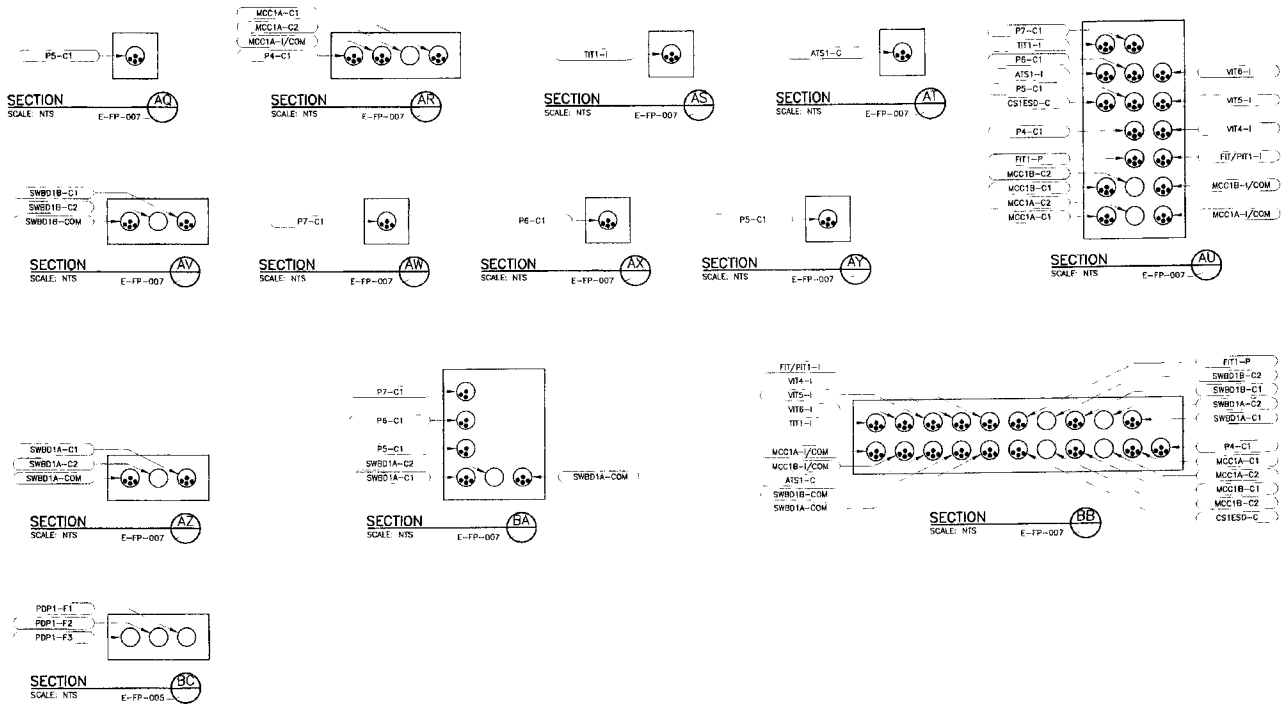

GENERAL NOTES:

1. CONTRACTOR SHALL CLOSELY AND CAREFULLY COORDINATE ROUTE OF PROPOSED CONDUIT/WIRE WITH EXISTING AND PROPOSED CIVIL/MECHANICAL/STRUCTURAL/ELECTRICAL SYSTEMS/COMPONENTS/EQUIPMENT/UTILITIES, ETC.
2. THE ACTUAL REQUIRED SIZE OF THE CONDUIT ENTRANCE AREAS FOR ALL EQUIPMENT IS TO BE DETERMINED BY THE EQUIPMENT MANUFACTURER. THE LOCATION AND SIZE OF CONDUIT ENTRANCE AREAS OF MOTOR CONTROL CENTERS, TRANSFORMERS, SWITCHBOARDS, ETC. SHALL BE CLOSELY AND CAREFULLY COORDINATED WITH THE EQUIPMENT MANUFACTURER. REFER TO APPLICABLE CIVIL/STRUCTURAL/ELECTRICAL/ETC. DRAWINGS.
3. THIS DRAWING IS INTENDED TO SHOW THE MINIMUM CONDUIT/WIRE REQUIRED WITHIN THE APPLICABLE POWER DUCTBANKS INDICATED. THE ACTUAL ARRANGEMENT OF CONDUIT/WIRE MAY VARY FROM THAT WHICH IS SHOWN. ALSO REFER TO I&C DUCTBANK DRAWINGS FOR POSSIBLE ADDITIONAL CONDUIT/WIRE TO BE INCLUDED IN COMBINED DUCTBANKS.
4. EQUIPMENT/CONDUIT TAGS/NAMES HAVE BEEN ARBITRARILY ASSIGNED TO AID IN THE DRAWINGS.
5. ALL DUCT BANK SYSTEMS CONSIST OF CONDUITS SET AND SPACED IN REINFORCED CONCRETE. REFER TO DRAWINGS NO. E-DET-004 AND E-DET-011 FOR TYPICAL CONSTRUCTION DETAILS.
6. REFER TO DRAWING NO. E-SECT-004 FOR DUCTBANK DIMENSIONS.

REFERENCE DRAWINGS:

E-OL-007 – E-OL-013 – ONE-LINE DIAGRAMS

E-FP-004 – E-FP-008 – ELECTRICAL BUILDING FLOOR PLANS

E-SP-006 – OVERALL SITE PLAN-RENOVATION

E-SECT-001 – E-SECT-004 – DUCTBANK SECTIONS

E-RWS-001 – E-RWS-003 – CONDUIT/WIRE SCHEMATICS

E-CS-001 – E-CS-002 – CONDUIT/WIRE SCHEDULE

BAR IS 1" ON ORIGINAL DRAWING. IF NOT 1" ADJUST SCALES ACCORDINGLY

2/21/2005

HARUTUNIAN ENGINEERING INCORPORATED

ENGINEERING AND ENVIRONMENTAL CONSULTANTS
305 EAST HUNTLAND DRIVE SUITE 500
AUSTIN, TEXAS 78752

REUSE OF DOCUMENTS
This document and the ideas and designs incorporated herein as an instrument of professional service has been developed, designed and prepared by Harutunian Engineering, Inc. and is not to be used, in whole or part, for any other project without the written authorization of Water District No. 10 and Harutunian Engineering, Inc. © 2005

HEI
HEI
HEI
FEBRUARY 2005
NONE

TRAVIS COUNTY WATER CONTROL & IMPROVEMENT DISTRICT NO 10
PUMP STATION NO. 1

DUCT BANK SECTIONS
(SHEET 3 OF 4)

2002-210 | SHEET 51 | E-SECT-003

DUCT BANK SECTION DIMENSION TABLE

SECTION IDENTIFIER	HORIZONTAL (INCHES)	VERTICAL (INCHES)
A	18	12
B	30	12
C	30	18
D	30	12
E	30	24
F	30	12
G	30	36
H	18	30
I	24	24
J	24	12
K	12	12
L	18	12
M	12	12
N	12	12
O	12	12
P	18	12
Q	12	12
R	24	12
S	18	12
T	30	18
U	36	24
V	18	12
W	36	30
X	24	18
Y	12	12
Z	36	24

DUCT BANK SECTION DIMENSION TABLE (CONTINUED)

SECTION IDENTIFIER	HORIZONTAL (INCHES)	VERTICAL (INCHES)
AA	24	18
AB	24	42
AC	42	24
AD	24	24
AE	12	12
AF	30	24
AG	30	12
AH	24	18
AI	24	30
AJ	24	18
AK	24	24
AL	12	12
AM	30	24
AN	30	48
AO	30	24
AP	24	24
AQ	12	12
AR	30	12
AS	12	12
AT	12	12
AU	24	48
AV	24	12
AW	12	12
AX	12	12
AY	12	12
AZ	24	12

DUCT BANK SECTION DIMENSION TABLE (CONTINUED)

SECTION IDENTIFIER	HORIZONTAL (INCHES)	VERTICAL (INCHES)
BA	24	30
BB	72	18
BC	30	18

GENERAL NOTES:

1. CONTRACTOR SHALL CLOSELY AND CAREFULLY COORDINATE ROUTE OF PROPOSED CONDUIT/WIRE WITH EXISTING AND PROPOSED CIVIL/MECHANICAL/STRUCTURAL/ELECTRICAL SYSTEMS/COMPONENTS/EQUIPMENT/UTILITIES, ETC.
2. THE ACTUAL REQUIRED SIZE OF THE CONDUIT ENTRANCE AREAS FOR ALL EQUIPMENT IS TO BE DETERMINED BY THE EQUIPMENT MANUFACTURER. THE LOCATION AND SIZE OF CONDUIT ENTRANCE AREAS OF MOTOR CONTROL CENTERS, TRANSFORMERS, SWITCHBOARDS, ETC. SHALL BE CLOSELY AND CAREFULLY COORDINATED WITH THE EQUIPMENT MANUFACTURER. REFER TO APPLICABLE CIVIL/STRUCTURAL/ELECTRICAL/ETC. DRAWINGS.
3. THIS DRAWING IS INTENDED TO SHOW THE MINIMUM CONDUIT/WIRE REQUIRED WITHIN THE APPLICABLE POWER DUCTBANKS INDICATED. THE ACTUAL ARRANGEMENT OF CONDUIT/WIRE MAY VARY, FROM THAT WHICH IS SHOWN. ALSO REFER TO I&C DUCTBANK DRAWINGS FOR POSSIBLE ADDITIONAL CONDUIT/WIRE TO BE INCLUDED IN COMBINED DUCTBANKS.
4. EQUIPMENT/CONDUIT TAGS/NAMES HAVE BEEN ARBITRARILY ASSIGNED TO AID IN THE DRAWINGS.
5. ALL DUCT BANK SYSTEMS CONSIST OF CONDUITS SET AND SPACED IN REINFORCED CONCRETE. REFER TO DRAWINGS NO. E-DET-004 AND E-DET-011 FOR TYPICAL CONSTRUCTION DETAILS.

REFERENCE DRAWINGS:

E-OL-007 – E-OL-013 – ONE-LINE DIAGRAMS

E-FP-004 – E-FP-008 – ELECTRICAL BUILDING FLOOR PLANS

E-SP-006 – OVERALL SITE PLAN-RENOVATION

E-SECT-001 – E-SECT-003 – DUCTBANK SECTIONS

E-RWS-001 – E-RWS-003 – CONDUIT/WIRE SCHEMATICS

E-CS-001 – E-CS-002 – CONDUIT/WIRE SCHEDULE

DUCT BANK DIMENSION TABLE LEGEND:

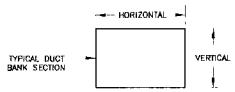

NOTE: DIMENSIONS SHOWN ON TABLE ARE NOMINAL DIMENSIONS IN INCHES. ACTUAL DIMENSIONS MAY VARY

BAR LENGTH ON LIMITED DRAWING TO SCALE ONE INCH AS JUSTIFIED ACCORDINGLY

2/2/2005

HARUTUNIAN ENGINEERING INCORPORATED

ENGINEERING AND ENVIRONMENTAL CONSULTANTS
305 EAST HUNTLAND DRIVE SUITE 500
AUSTIN, TEXAS 78752

REUSE OF DOCUMENTS
This document and the ideas and designs incorporated herein as an instrument of professional service has been developed, designed and prepared by Harutunian Engineering, Inc., and it not to be used, in whole or part, for any other project without the written authorization of Water District No. 10 and Harutunian Engineering, Inc. © 2005

HEI
HEI
HEI
FEBRUARY 2005
NONE

TRAVIS COUNTY WATER CONTROL & IMPROVEMENT DISTRICT NO 10
PUMP STATION NO 1

DUCT BANK SECTIONS
(SHEET 4 OF 4)

2002-210 | SHEET 52 | E-SECT-004

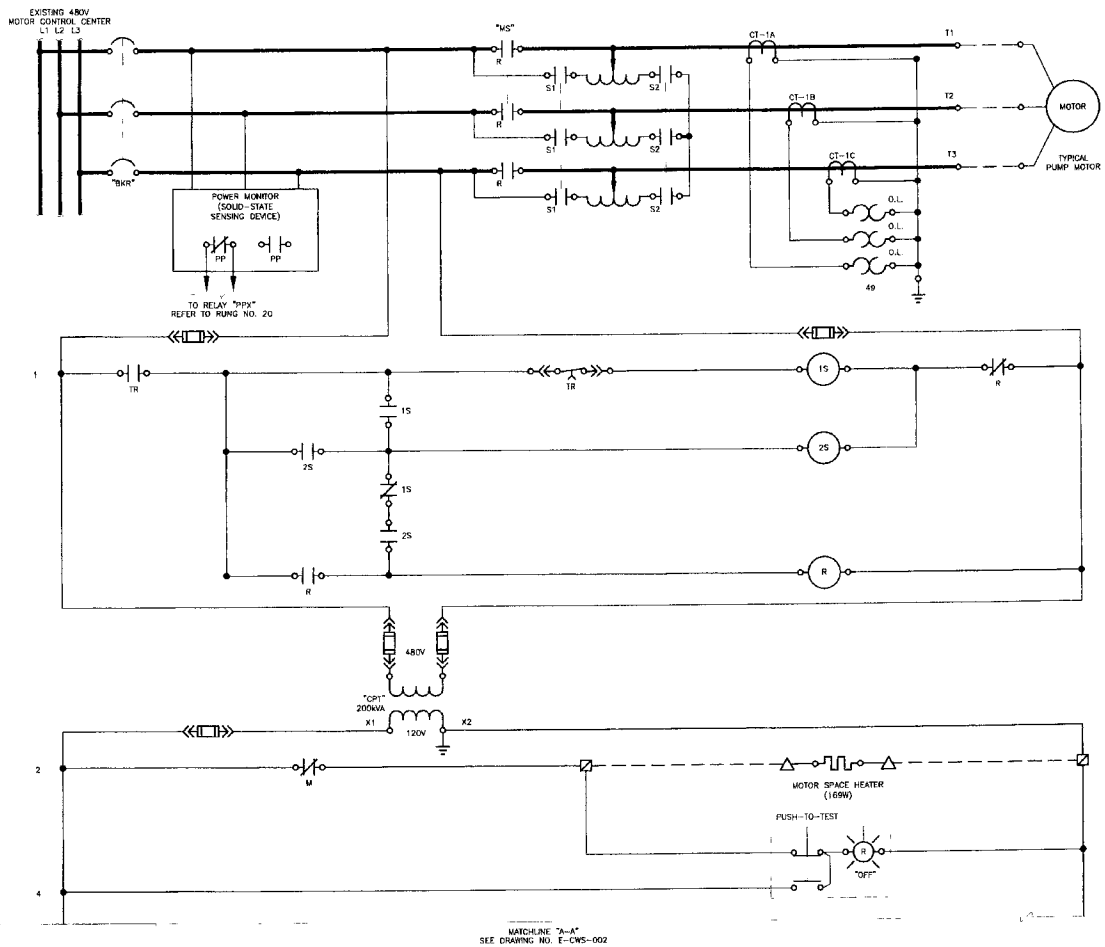

WIRING AND TERMINAL DEVICE LEGEND:

- — — INDICATES WIRING BETWEEN PANELS OR TO A FIELD MOUNTED DEVICE.
- ○ DEVICE WIRING TERMINAL
- ▨ EXISTING TERMINAL BLOCK LOCATED IN EXISTING 480V MOTOR CONTROL CENTER (MCC). ANY DEVICE SHOWN WITH DEVICE WIRING TERMINALS CONNECTED DIRECTLY TO THESE SYMBOLS WITH SOLID LINES IS ALSO LOCATED IN EXISTING 480V MCC.
- ▲ EXISTING TERMINAL BLOCK LOCATED IN EXISTING TONE TELEMETRY CABINET. ANY DEVICE SHOWN WITH DEVICE TERMINALS CONNECTED DIRECTLY TO THESE SYMBOLS WITH SOLID LINES IS LOCATED IN OR ON THE EQUIPMENT
- △ EXISTING TERMINAL BLOCK LOCATED IN FIELD MOUNTED EQUIPMENT AS NOTED. ANY DEVICE SHOWN WITH DEVICE WIRING TERMINALS CONNECTED DIRECTLY TO THESE SYMBOLS WITH SOLID LINES IS LOCATED IN OR ON THE EQUIPMENT

GENERAL NOTES:

1. AN ATTEMPT IS MADE TO SHOW ALL EXISTING EQUIPMENT ON THIS CONTROL LOGIC DIAGRAM, BASED ON THE INFORMATION PROVIDED FROM THE PREVIOUS PROJECT ENTITLED "TRAVIS COUNTY WATER CONTROL AND IMPROVEMENT DISTRICT NO. 10, CONSTRUCTION PLANS FOR WATER IMPROVEMENTS PROJECT NO. 2, PUMP STATION NO. 1" DATED SEPTEMBER, 1981. HOWEVER, THERE ARE NO AVAILABLE AS BUILT RECORDS IDENTIFYING THE EXACT CONFIGURATION/ TERMINATION OF CONTROL WIRING WITHIN THE MOTOR CONTROL CENTER, CONTROL PANELS, LIGHTING PANELS, LOADS, ETC., AND THEIR COORDINATION WITH THE EXISTING CONTROL/TELEMETRY SYSTEM. THEREFORE, THE CONTRACTOR MUST EXERCISE EXTREME CARE, VERIFY THE TERMINATION/ CONFIGURATION OF SYSTEM WIRING PRIOR TO COMMENCING FULL SCALE DEMOLITION OR RENOVATION ACTIVITIES. FOLLOWING THE DISCOVERY VERIFICATION OF THE EXISTING FIELD CONDITIONS, SHOULD ADJUSTMENTS BECOME A NECESSITY TO THE EXISTING OR PROPOSED SYSTEM (AS APPLICABLE), THE EXISTING DISCOVERED FIELD CONDITIONS MUST BE BROUGHT TO THE ENGINEER'S ATTENTION FOR EXECUTION OF THE NECESSARY ADJUSTMENTS.
2. UNLESS OTHERWISE NOTED AND/OR INDICATED, EQUIPMENT SHOWN IS EXISTING.
3. CLOSELY AND CAREFULLY COORDINATE/VERIFY ALL POINTS OF CONNECTION PRIOR TO COMMENCING INSTALLATION/MODIFICATION ACTIVITIES.
4. TYPICAL EXISTING PUMPING UNIT CONTROL LOGIC SHOWN HERE. THIS EXISTING CONTROL LOGIC IS TYPICAL FOR PUMPS "P-4", "P-5", AND "P-6".

REFERENCE DRAWINGS:

E-OL-001 – E-OL-002 – ONE-LINE DIAGRAM

E-CWS-004 – TYPICAL VALVE CONTROL SCHEMATIC

E-CWS-006 – E-CWS-007 – GENERAL CONTROL SCHEMATIC

BAR LENGTH ON ORIGINAL DRAWING EQUALS ONE INCH. ADJUST SCALE ACCORDINGLY

STATE OF TEXAS
K. A. HARUTUNIAN
48911
REGISTERED
PROFESSIONAL ENGINEER
2/21/2005

HARUTUNIAN ENGINEERING INCORPORATED
ENGINEERING AND ENVIRONMENTAL CONSULTANTS
305 EAST HUNTLAND DRIVE SUITE 500
AUSTIN, TEXAS 78752

REUSE OF DOCUMENTS
This document and the ideas and designs incorporated herein as an instrument of professional service has been developed, designed and prepared by Harutunian Engineering, Inc. and is not to be used, in whole or part, for any other project without the written authorization of Water District No. 10 and Harutunian Engineering, Inc. © 2005

DESIGNED BY HEI
DRAWN BY HEI
REVIEWED BY HEI
DATE FEBRUARY 2005
SCALE NONE

TRAVIS COUNTY WATER CONTROL & IMPROVEMENT DISTRICT NO 10
PUMP STATION NO. 1

TYPICAL PUMPING UNIT "P-4", "P-5", AND "P-6"
CONTROL SCHEMATIC – EXISTING
(SHEET 1 OF 3)

JOB NO. 2002-210 | SHEET 53 | DWG. NO. E-CWS-001

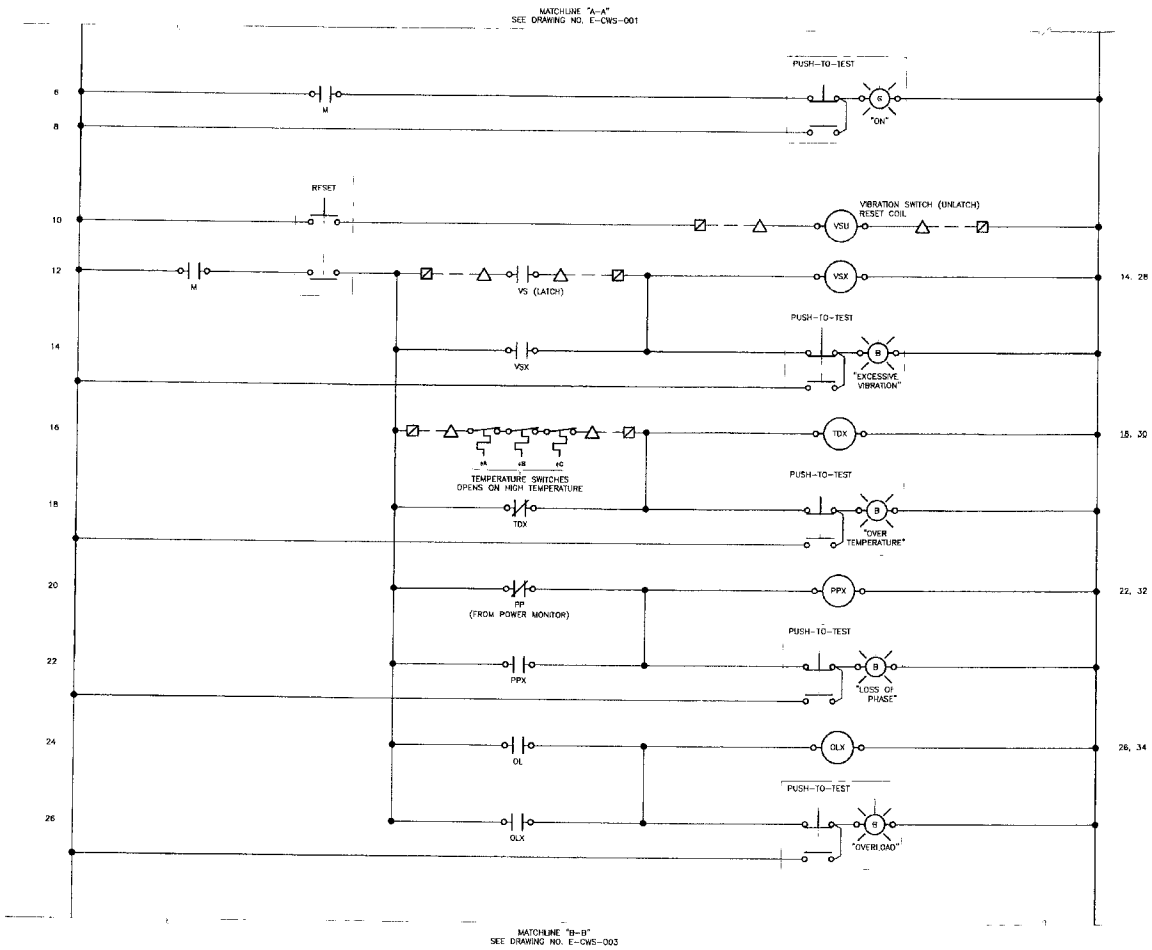

WIRING AND TERMINAL DEVICE LEGEND.

- — — INDICATES WIRING BETWEEN PANELS OR TO A FIELD MOUNTED DEVICE.
- ○ DEVICE WIRING TERMINAL
- ▨ EXISTING TERMINAL BLOCK LOCATED IN EXISTING 480V MOTOR CONTROL CENTER (MCC). ANY DEVICE SHOWN WITH DEVICE WIRING TERMINALS CONNECTED DIRECTLY TO THESE SYMBOLS WITH SOLID LINES IS ALSO LOCATED IN EXISTING 480V MCC
- ▲ EXISTING TERMINAL BLOCK LOCATED IN EXISTING TONE TELEMETRY CABINET. ANY DEVICE SHOWN WITH DEVICE TERMINALS CONNECTED DIRECTLY TO THESE SYMBOLS WITH SOLID LINES IS LOCATED IN OR ON THE EQUIPMENT
- △ EXISTING TERMINAL BLOCK LOCATED IN FIELD MOUNTED EQUIPMENT AS NOTED. ANY DEVICE SHOWN WITH DEVICE WIRING TERMINALS CONNECTED DIRECTLY TO THESE SYMBOLS WITH SOLID LINES IS LOCATED IN OR ON THE EQUIPMENT

GENERAL NOTES.

1. AN ATTEMPT IS MADE TO SHOW ALL EXISTING EQUIPMENT ON THIS CONTROL LOGIC DIAGRAM, BASED ON THE INFORMATION PROVIDED FROM THE PREVIOUS PROJECT ENTITLED "TRAVIS COUNTY WATER CONTROL AND IMPROVEMENT DISTRICT NO. 10, CONSTRUCTION PLANS FOR WATER IMPROVEMENTS PROJECT NO. 2, PUMP STATION NO. 1" DATED SEPTEMBER, 1981. HOWEVER, THERE ARE NO AVAILABLE AS BUILT RECORDS IDENTIFYING THE EXACT CONFIGURATION/ TERMINATION OF CONTROL WIRING WITHIN THE MOTOR CONTROL CENTER CONTROL PANELS, LIGHTING PANELS, LOADS, ETC., AND THEIR COORDINATION WITH THE EXISTING CONTROL/TELEMETRY SYSTEM. THEREFORE, THE CONTRACTOR MUST EXERCISE EXTREME CARE, VERIFY THE TERMINATION/ CONFIGURATION OF SYSTEM WIRING PRIOR TO COMMENCING FULL SCALE DEMOLITION OR RENOVATION ACTIVITIES. FOLLOWING THE DISCOVERY VERIFICATION OF THE EXISTING FIELD CONDITIONS, SHOULD ADJUSTMENTS BECOME A NECESSITY TO THE EXISTING OR PROPOSED SYSTEM (AS APPLICABLE), THE EXISTING DISCOVERED FIELD CONDITIONS MUST BE BROUGHT TO THE ENGINEER'S ATTENTION FOR EXECUTION OF THE NECESSARY ADJUSTMENTS.
2. UNLESS OTHERWISE NOTED AND/OR INDICATED, EQUIPMENT SHOWN IS EXISTING.
3. CLOSELY AND CAREFULLY COORDINATE/VERIFY ALL POINTS OF CONNECTION PRIOR TO COMMENCING INSTALLATION/MODIFICATION ACTIVITIES.
4. TYPICAL EXISTING PUMPING UNIT CONTROL LOGIC SHOWN HERE. THIS EXISTING CONTROL LOGIC IS TYPICAL FOR PUMPS "P-4", "P-5", AND "P-6"

REFERENCE DRAWINGS:

E-OL-001 – E-OL-002 – ONE-LINE DIAGRAM

E-CWS-004 – TYPICAL VALVE CONTROL SCHEMATIC

E-CWS-006 – E-CWS-007 – GENERAL CONTROL SCHEMATIC

BAR LENGTH OF ORIGINAL DRAWING IS 1.5 ONE INCH. USE TO SCALE ADDITIONAL DRAWINGS

2/21/2005

HARUTUNIAN ENGINEERING INCORPORATED

ENGINEERING AND ENVIRONMENTAL CONSULTANTS
305 EAST HUNTLAND DRIVE SUITE 500
AUSTIN, TEXAS 78752

REUSE OF DOCUMENTS

This document and the ideas and designs incorporated herein as an instrument of professional service has been developed, designed and prepared by Harutunian Engineering, Inc. and is not to be used, in whole or part, for any other project without the written authorization of Water District No. 10 and Harutunian Engineering, Inc. © 2005

DESIGNED BY HEI
DRAWN BY HEI
CHECKED BY HEI
DATE FEBRUARY 2005
SCALE NONE

TRAVIS COUNTY WATER CONTROL & IMPROVEMENT DISTRICT NO 10
PUMP STATION NO 1

TYPICAL PUMPING UNIT "P-4", "P-5", AND "P-6" CONTROL SCHEMATIC – EXISTING (SHEET 2 OF 3)

JOB NO. 2002-210 | SHEET 54 | E-CWS-002

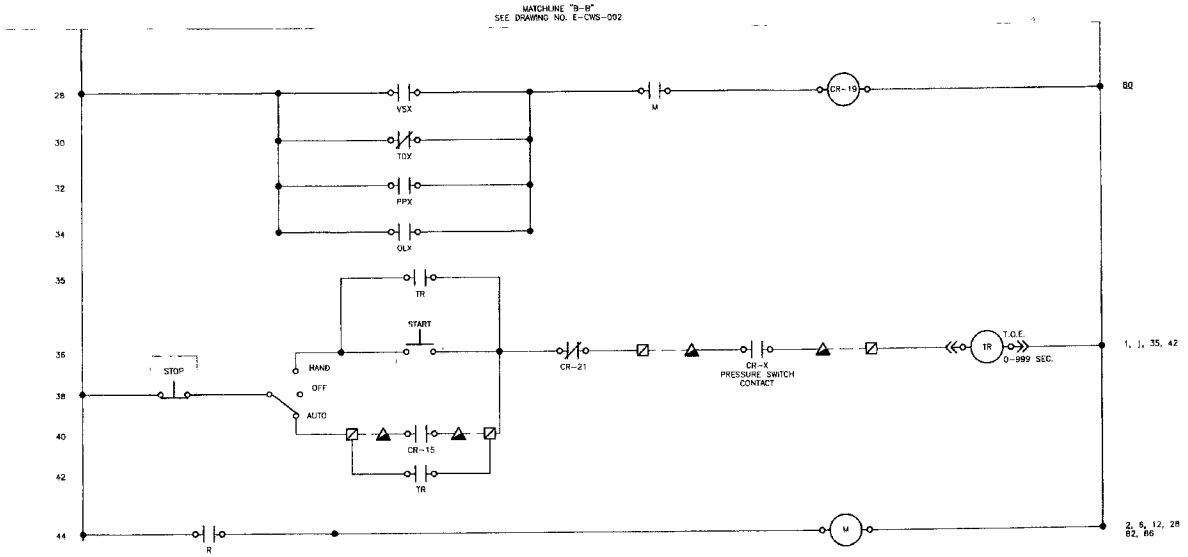

WIRING AND TERMINAL DEVICE LEGEND:

— — INDICATES WIRING BETWEEN PANELS OR TO A FIELD MOUNTED DEVICE.

o DEVICE WIRING TERMINAL

EXISTING TERMINAL BLOCK LOCATED IN EXISTING 480V MOTOR CONTROL CENTER (MCC). ANY DEVICE SHOWN WITH DEVICE WIRING TERMINALS CONNECTED DIRECTLY TO THESE SYMBOLS WITH SOLID LINES IS ALSO LOCATED IN EXISTING 480V MCC.

EXISTING TERMINAL BLOCK LOCATED IN EXISTING TONE TELEMETRY CABINET. ANY DEVICE SHOWN WITH DEVICE TERMINALS CONNECTED DIRECTLY TO THESE SYMBOLS WITH SOLID LINES IS LOCATED IN OR ON THE EQUIPMENT

EXISTING TERMINAL BLOCK LOCATED IN FIELD MOUNTED EQUIPMENT AS NOTED. ANY DEVICE SHOWN WITH DEVICE WIRING TERMINALS CONNECTED DIRECTLY TO THESE SYMBOLS WITH SOLID LINES IS LOCATED IN OR ON THE EQUIPMENT

GENERAL NOTES:

1. AN ATTEMPT IS MADE TO SHOW ALL EXISTING EQUIPMENT ON THIS CONTROL LOGIC DIAGRAM, BASED ON THE INFORMATION PROVIDED FROM THE PREVIOUS PROJECT ENTITLED "TRAVIS COUNTY WATER CONTROL AND IMPROVEMENT DISTRICT NO. 10, CONSTRUCTION PLANS FOR WATER IMPROVEMENTS PROJECT NO. 2, PUMP STATION NO. 1" DATED SEPTEMBER, 1981. HOWEVER, THERE ARE NO AVAILABLE AS BUILT RECORDS IDENTIFYING THE EXACT CONFIGURATION/ TERMINATION OF CONTROL WIRING WITHIN THE MOTOR CONTROL CENTER, CONTROL PANELS, LIGHTING PANELS, LOADS, ETC., AND THEIR COORDINATION WITH THE EXISTING CONTROL/TELEMETRY SYSTEM. THEREFORE, THE CONTRACTOR MUST EXERCISE EXTREME CARE, VERIFY THE TERMINATION/ CONFIGURATION OF SYSTEM WIRING PRIOR TO COMMENCING FULL SCALE DEMOLITION OR RENOVATION ACTIVITIES. FOLLOWING THE DISCOVERY VERIFICATION OF THE EXISTING FIELD CONDITIONS, SHOULD ADJUSTMENTS BECOME A NECESSITY TO THE EXISTING OR PROPOSED SYSTEM (AS APPLICABLE), THE EXISTING DISCOVERED FIELD CONDITIONS MUST BE BROUGHT TO THE ENGINEER'S ATTENTION FOR EXECUTION OF THE NECESSARY ADJUSTMENTS.
2. UNLESS OTHERWISE NOTED AND/OR INDICATED, EQUIPMENT SHOWN IS EXISTING.
3. CLOSELY AND CAREFULLY COORDINATE/VERIFY ALL POINTS OF CONNECTION PRIOR TO COMMENCING INSTALLATION/MODIFICATION ACTIVITIES.
4. TYPICAL EXISTING PUMPING UNIT CONTROL LOGIC SHOWN HERE. THIS EXISTING CONTROL LOGIC IS TYPICAL FOR PUMPS "P-4", "P-5", AND "P-6"

REFERENCE DRAWINGS:

E-OL-001 – E-OL-002 – ONE-LINE DIAGRAM

E-CWS-004 – TYPICAL VALVE CONTROL SCHEMATIC

E-CWS-006 – E-CWS-007 – GENERAL CONTROL SCHEMATIC

BAR IS 2 IN ON ORIGINAL DRAWING EQUALS ONE INCH ADJUST SCALE ACCORDINGLY

STATE OF TEXAS
REGISTERED
PROFESSIONAL ENGINEER
2/4/2005

HARUTUNIAN ENGINEERING INCORPORATED
ENGINEERING AND ENVIRONMENTAL CONSULTANTS
309 EAST HUNTLAND DRIVE SUITE 500
AUSTIN, TEXAS 78752

REUSE OF DOCUMENTS
This document and the ideas and designs incorporated herein as an instrument of professional service has been developed, designed and prepared by Harutunian Engineering, Inc. and is not to be used, in whole or part, for any other project without the written authorization of Water District No. 10 and Harutunian Engineering, Inc. © 2005

DESIGNED BY HEI
DRAWN BY HEI
REVIEWED BY HEI
DATE FEBRUARY 2005
SCALE NONE

TRAVIS COUNTY WATER CONTROL & IMPROVEMENT DISTRICT NO 10
PUMP STATION NO 1

TYPICAL PUMPING UNIT "P-4", "P-5", AND "P-6"
CONTROL SCHEMATIC – EXISTING
(SHEET 3 OF 3)

PROJECT NO. 2002-210 | SHEET 55 | DWG E-CWS-003

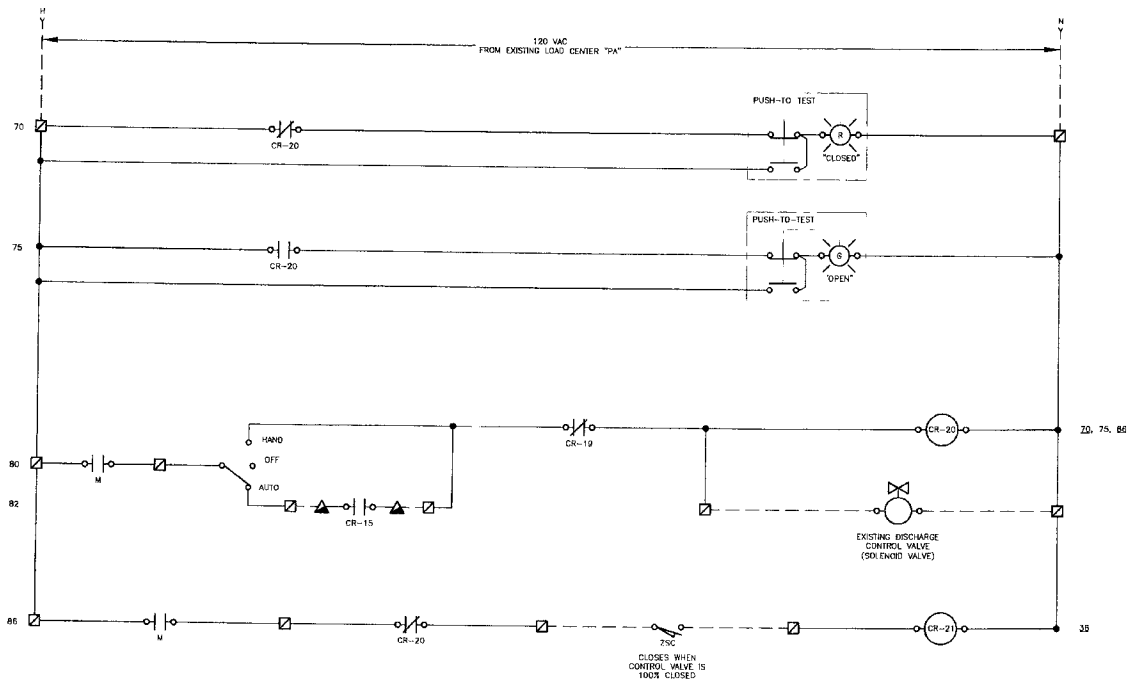

WIRING AND TERMINAL DEVICE LEGEND:

— — INDICATES WIRING BETWEEN PANELS OR TO A FIELD MOUNTED DEVICE.

o DEVICE WIRING TERMINAL

▨ EXISTING TERMINAL BLOCK LOCATED IN EXISTING 480V MOTOR CONTROL CENTER (MCC). ANY DEVICE SHOWN WITH DEVICE WIRING TERMINALS CONNECTED DIRECTLY TO THESE SYMBOLS WITH SOLID LINES IS ALSO LOCATED IN EXISTING 480V MCC.

▲ EXISTING TERMINAL BLOCK LOCATED IN EXISTING TONE TELEMETRY CABINET. ANY DEVICE SHOWN WITH DEVICE TERMINALS CONNECTED DIRECTLY TO THESE SYMBOLS WITH SOLID LINES IS LOCATED IN OR ON THE EQUIPMENT

△ EXISTING TERMINAL BLOCK LOCATED IN FIELD MOUNTED EQUIPMENT AS NOTED. ANY DEVICE SHOWN WITH DEVICE WIRING TERMINALS CONNECTED DIRECTLY TO THESE SYMBOLS WITH SOLID LINES IS LOCATED IN OR ON THE EQUIPMENT

GENERAL NOTES:

1. AN ATTEMPT IS MADE TO SHOW ALL EXISTING EQUIPMENT ON THIS CONTROL LOGIC DIAGRAM, BASED ON THE INFORMATION PROVIDED FROM THE PREVIOUS PROJECT ENTITLED "TRAVIS COUNTY WATER CONTROL AND IMPROVEMENT DISTRICT NO. 10, CONSTRUCTION PLANS FOR WATER IMPROVEMENTS PROJECT NO. 2, PUMP STATION NO. 1" DATED SEPTEMBER, 1981. HOWEVER, THERE ARE NO AVAILABLE AS BUILT RECORDS IDENTIFYING THE EXACT CONFIGURATION/ TERMINATION OF CONTROL WIRING WITHIN THE MOTOR CONTROL CENTER, CONTROL PANELS, LIGHTING PANELS, LOADS, ETC., AND THEIR COORDINATION WITH THE EXISTING CONTROL/TELEMETRY SYSTEM. THEREFORE, THE CONTRACTOR MUST EXERCISE EXTREME CARE, VERIFY THE TERMINATION/ CONFIGURATION OF SYSTEM WIRING PRIOR TO COMMENCING FULL SCALE DEMOLITION OR RENOVATION ACTIVITIES. FOLLOWING THE DISCOVERY VERIFICATION OF THE EXISTING FIELD CONDITIONS, SHOULD ADJUSTMENTS BECOME A NECESSITY TO THE EXISTING OR PROPOSED SYSTEM (AS APPLICABLE), THE EXISTING DISCOVERED FIELD CONDITIONS MUST BE BROUGHT TO THE ENGINEER'S ATTENTION FOR EXECUTION OF THE NECESSARY ADJUSTMENTS.
2. UNLESS OTHERWISE NOTED AND/OR INDICATED, EQUIPMENT SHOWN IS EXISTING.
3. CLOSELY AND CAREFULLY COORDINATE/VERIFY ALL POINTS OF CONNECTION PRIOR TO COMMENCING INSTALLATION/MODIFICATION ACTIVITIES.
4. TYPICAL EXISTING CONTROL VALVE CONTROL LOGIC SHOWN HERE. THIS EXISTING CONTROL LOGIC IS TYPICAL FOR CONTROL VALVE "CV-4", "CV-5", AND "CV-6"

REFERENCE DRAWINGS:

E-OL-001 – E-OL-002 – ONE-LINE DIAGRAM

E-CWS-001 – E-CWS-003 – TYPICAL PUMP CONTROL SCHEMATIC

E-CWS-007 – GENERAL CONTROL SCHEMATIC

BAR IS 1" ON ORIGINAL DRAWING. IF NOT ADJUST SCALE ACCORDINGLY

STATE OF TEXAS
K. A. HARUTUNIAN
2/2/2005

HARUTUNIAN ENGINEERING INCORPORATED
ENGINEERING AND ENVIRONMENTAL CONSULTANTS
305 EAST HUNTLAND DRIVE SUITE 500
AUSTIN, TEXAS 78752

REUSE OF DOCUMENTS
This document and the ideas and designs incorporated herein as an instrument of professional service has been developed, designed and prepared by Harutunian Engineering, Inc. and is not to be used, in whole or part, for any other project without the written authorization of Water District No. 10 and Harutunian Engineering, Inc. © 2005

NO.	DATE	DESCRIPTION

DESIGNED BY HEI
DRAWN BY HEI
CHECKED BY HEI
FEBRUARY 2005
SCALE NONE

TRAVIS COUNTY WATER CONTROL & IMPROVEMENT DISTRICT NO 10
PUMP STATION NO 1

TYPICAL CONTROL VALVE "CV-4", "CV-5", AND "CV-6"
CONTROL SCHEMATIC – EXISTING

JOB NO. 2002-210 | SHEET 58 | DWG. NO. E-CWS-004

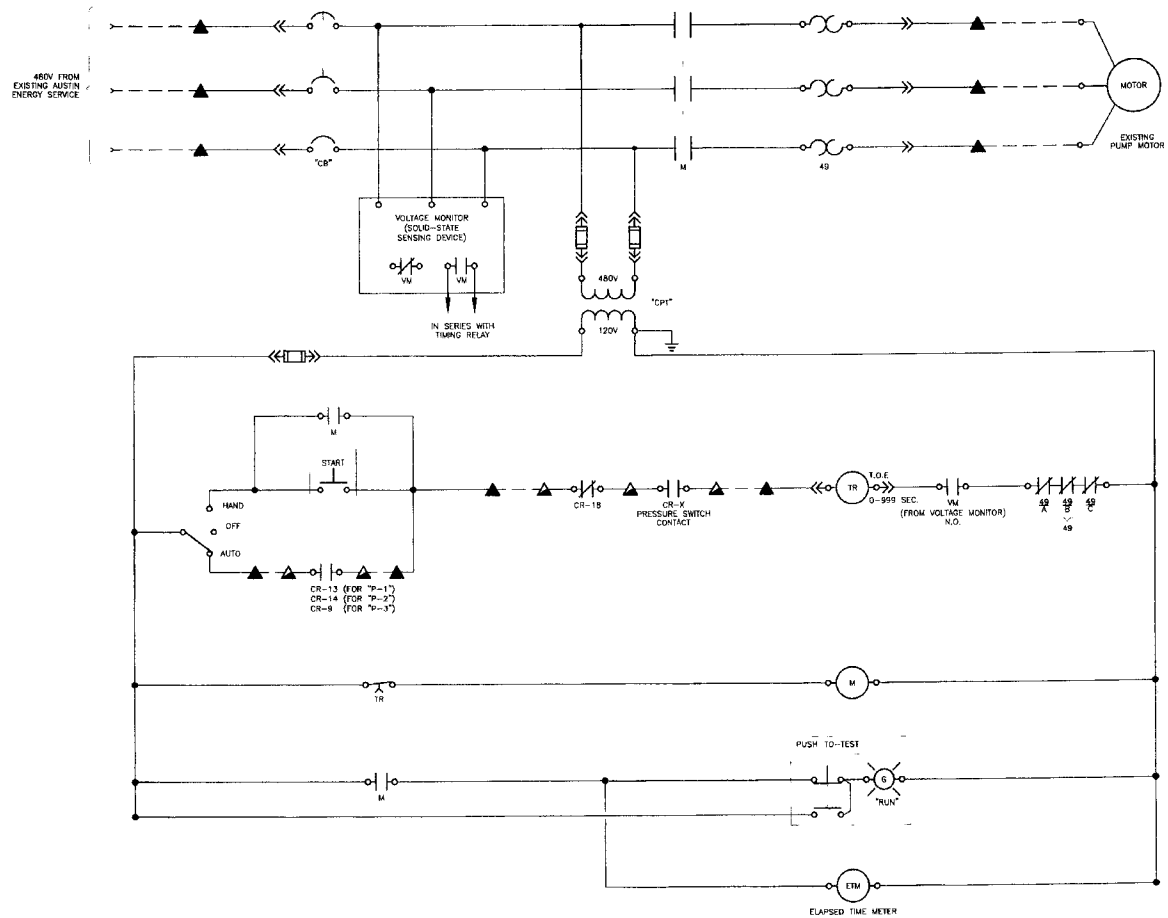

WIRING AND TERMINAL DEVICE LEGEND:

- — — INDICATES WIRING BETWEEN PANELS OR TO A FIELD MOUNTED DEVICE.
- o DEVICE WIRING TERMINAL
- ▲ EXISTING TERMINAL BLOCK LOCATED IN EXISTING FIELD MOUNTED COMBINATION MOTOR STARTER ENCLOSURE. ANY DEVICE SHOWN WITH DEVICE WIRING TERMINALS CONNECTED DIRECTLY TO THESE SYMBOLS WITH SOLID LINES IS ALSO LOCATED IN THE EXISTING COMBINATION MOTOR STARTER ENCLOSURE.
- ▲ EXISTING TERMINAL BLOCK LOCATED IN EXISTING TONE TELEMETRY CABINET. ANY DEVICE SHOWN WITH DEVICE TERMINALS CONNECTED DIRECTLY TO THESE SYMBOLS WITH SOLID LINES IS LOCATED IN OR ON THE EQUIPMENT

GENERAL NOTES.

1. AN ATTEMPT IS MADE TO SHOW ALL EXISTING EQUIPMENT ON THIS CONTROL LOGIC DIAGRAM, BASED ON THE INFORMATION PROVIDED FROM THE PREVIOUS PROJECT ENTITLED "TRAVIS COUNTY WATER CONTROL AND IMPROVEMENT DISTRICT NO. 10, CONSTRUCTION PLANS FOR WATER IMPROVEMENTS PROJECT NO. 2, PUMP STATION NO. 1" DATED SEPTEMBER, 1981. HOWEVER, THERE ARE NO AVAILABLE AS BUILT RECORDS IDENTIFYING THE EXACT CONFIGURATION/ TERMINATION OF CONTROL WIRING WITHIN THE MOTOR CONTROL CENTER, CONTROL PANELS, LIGHTING PANELS, LOADS, ETC. AND THEIR COORDINATION WITH THE EXISTING CONTROL/TELEMETRY SYSTEM. THEREFORE, THE CONTRACTOR MUST EXERCISE EXTREME CARE, VERIFY THE TERMINATION/ CONFIGURATION OF SYSTEM WIRING PRIOR TO COMMENCING FULL SCALE DEMOLITION OR RENOVATION ACTIVITIES. FOLLOWING THE DISCOVERY VERIFICATION OF THE EXISTING FIELD CONDITIONS, SHOULD ADJUSTMENTS BECOME A NECESSITY TO THE EXISTING OR PROPOSED SYSTEM (AS APPLICABLE), THE EXISTING DISCOVERED FIELD CONDITIONS MUST BE BROUGHT TO THE ENGINEER'S ATTENTION FOR EXECUTION OF THE NECESSARY ADJUSTMENTS.
2. UNLESS OTHERWISE NOTED AND/OR INDICATED, EQUIPMENT SHOWN IS EXISTING.
3. CLOSELY AND CAREFULLY COORDINATE/VERIFY ALL POINTS OF CONNECTION PRIOR TO COMMENCING INSTALLATION/MODIFICATION ACTIVITIES.
4. TYPICAL EXISTING PUMPING UNIT CONTROL LOGIC SHOWN HERE. THIS EXISTING CONTROL LOGIC IS TYPICAL FOR PUMPS "P-1", "P-2", AND "P-3"

REFERENCE DRAWINGS.

E-OL-003 – ONE-LINE DIAGRAM

E-CWS-006 – E-CWS-007 – GENERAL CONTROL SCHEMATIC

B.F. 3.675 ON ORIG. AL DRAWING EQUALS ONE INCH. ALTER SCALE ACCORDINGLY

STATE OF TEXAS REGISTERED PROFESSIONAL ENGINEER 2/21/2005

HARUTUNIAN ENGINEERING INCORPORATED
ENGINEERING AND ENVIRONMENTAL CONSULTANTS
305 EAST HUNTLAND DRIVE SUITE 500
AUSTIN, TEXAS 78752

REUSE OF DOCUMENTS
This document and the ideas and designs incorporated herein as an instrument of professional service has been developed, designed and prepared by Harutunian Engineering, Inc. and is not to be used, in whole or part, for any other project without the written authorization of Water District No. 10 and Harutunian Engineering, Inc. © 2005

DR. BY HEI
CHECKED BY HEI
APPROVED BY HEI
DATE FEBRUARY 2005
SCALE NONE

TRAVIS COUNTY WATER CONTROL & IMPROVEMENT DISTRICT NO. 10
PUMP STATION NO. 1

TYPICAL PUMPING UNIT "P-1", "P-2", AND "P-3"
CONTROL SCHEMATIC – EXISTING

PROJ. NO. 2002-210 | SHEET 57 | DWG. NO. E-CWS-005

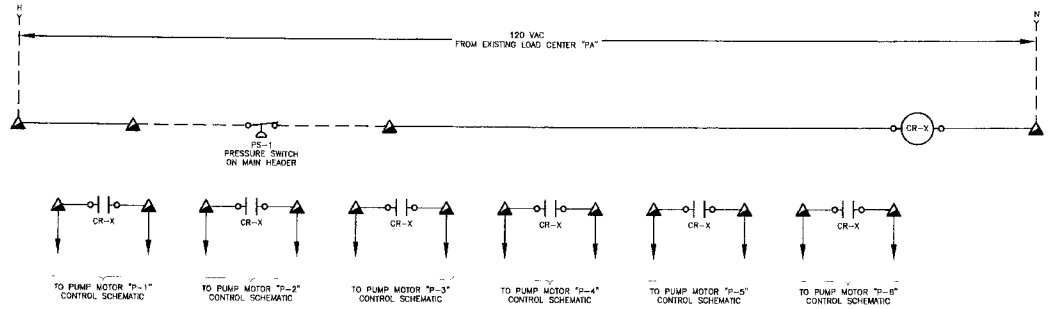

PRESSURE SWITCH CONTROL SCHEMATIC – EXISTING

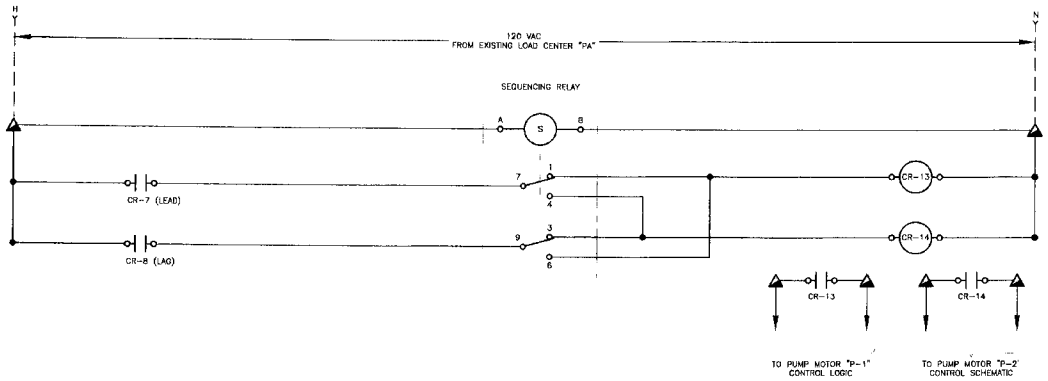

TWO PUMP "P-1" AND "P-2" ALTERNATOR CONTROL SCHEMATIC – EXISTING

WIRING AND TERMINAL DEVICE LEGEND.

– – INDICATES WIRING BETWEEN PANELS OR TO A FIELD MOUNTED DEVICE.

o DEVICE WIRING TERMINAL

▲ EXISTING TERMINAL BLOCK LOCATED IN EXISTING TONE TELEMETRY CABINET ANY DEVICE SHOWN WITH DEVICE TERMINALS CONNECTED DIRECTLY TO THESE SYMBOLS WITH SOLID LINES IS LOCATED IN OR ON THE EQUIPMENT

GENERAL NOTES:

1. AN ATTEMPT IS MADE TO SHOW ALL EXISTING EQUIPMENT ON THIS CONTROL LOGIC DIAGRAM, BASED ON THE INFORMATION PROVIDED FROM THE PREVIOUS PROJECT ENTITLED "TRAVIS COUNTY WATER CONTROL AND IMPROVEMENT DISTRICT NO. 10, CONSTRUCTION PLANS FOR WATER IMPROVEMENTS PROJECT NO. 2, PUMP STATION NO. 1" DATED SEPTEMBER, 1981 HOWEVER, THERE ARE NO AVAILABLE AS BUILT RECORDS IDENTIFYING THE EXACT CONFIGURATION/ TERMINATION OF CONTROL WIRING WITHIN THE MOTOR CONTROL CENTER, CONTROL PANELS, LIGHTING PANELS, LOADS, ETC., AND THEIR COORDINATION WITH THE EXISTING CONTROL/TELEMETRY SYSTEM. THEREFORE, THE CONTRACTOR MUST EXERCISE EXTREME CARE, VERIFY THE TERMINATION/ CONFIGURATION OF SYSTEM WIRING PRIOR TO COMMENCING FULL SCALE DEMOLITION OR RENOVATION ACTIVITIES. FOLLOWING THE DISCOVERY VERIFICATION OF THE EXISTING FIELD CONDITIONS, SHOULD ADJUSTMENTS BECOME A NECESSITY TO THE EXISTING OR PROPOSED SYSTEM (AS APPLICABLE), THE EXISTING DISCOVERED FIELD CONDITIONS MUST BE BROUGHT TO THE ENGINEER'S ATTENTION FOR EXECUTION OF THE NECESSARY ADJUSTMENTS.
2. UNLESS OTHERWISE NOTED AND/OR INDICATED, EQUIPMENT SHOWN IS EXISTING.
3. CLOSELY AND CAREFULLY COORDINATE/VERIFY ALL POINTS OF CONNECTION PRIOR TO COMMENCING INSTALLATION/MODIFICATION ACTIVITIES.

REFERENCE DRAWINGS.

E-CWS-001 – E-CWS-003 – TYPICAL PUMP (P4–P6) CONTROL SCHEMATIC

E-CWS-005 – TYPICAL PUMP (P1–P3) CONTROL SCHEMATIC

HARUTUNIAN ENGINEERING INCORPORATED
ENGINEERING AND ENVIRONMENTAL CONSULTANTS
305 EAST HUNTLAND DRIVE SUITE 500
AUSTIN, TEXAS 78752

REUSE OF DOCUMENTS
This document and the ideas and designs incorporated herein as an instrument of professional service has been developed, designed and prepared by Harutunian Engineering, Inc. and is not to be used in whole or part, for any other project without the written authorization of Water District No 10 and Harutunian Engineering, Inc. © 2005

HEI
HEI
HEI
FEBRUARY 2005
NONE

TRAVIS COUNTY WATER CONTROL & IMPROVEMENT DISTRICT NO. 10
PUMP STATION NO. 1

GENERAL CONTROL SCHEMATICS – EXISTING
(SHEET 1 OF 2)

2002-210 | SHEET 58 | E-CWS-006

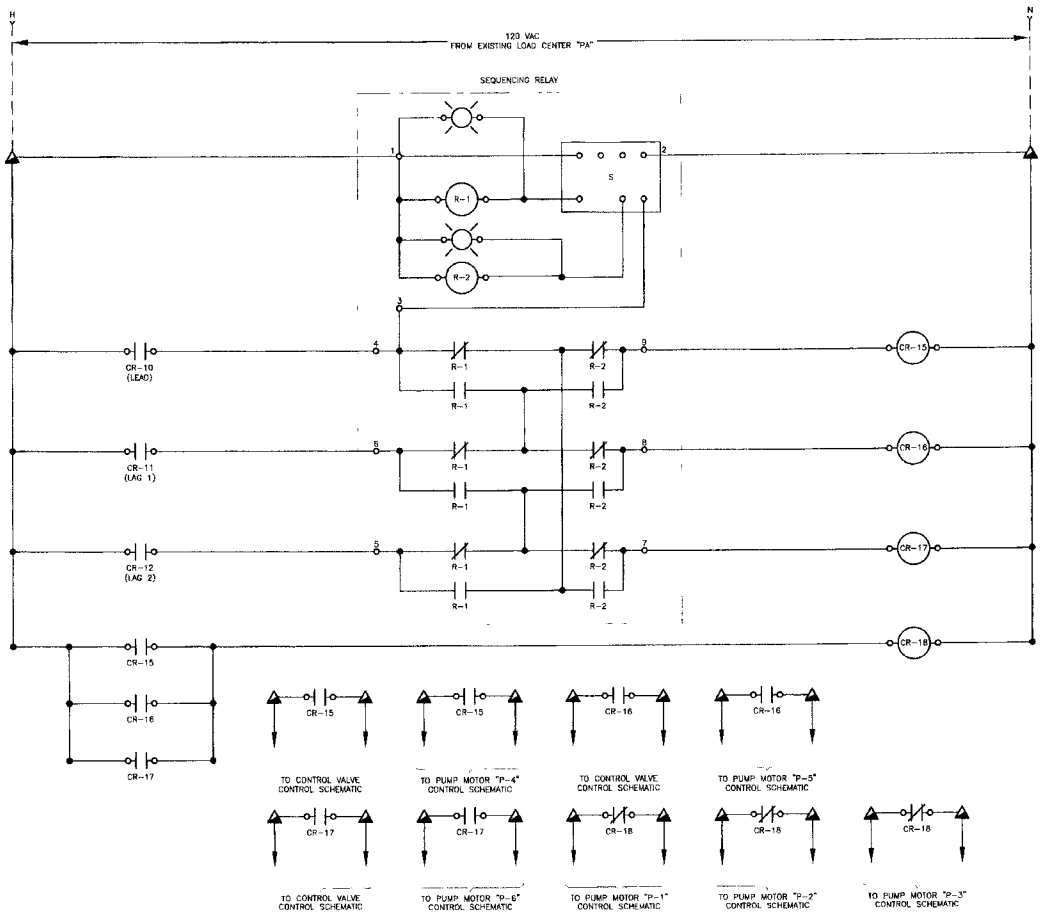

THREE PUMP "P-4", "P-5" AND "P-6" ALTERNATOR
CONTROL SCHEMATIC – EXISTING

WIRING AND TERMINAL DEVICE LEGEND:

— — INDICATES WIRING BETWEEN PANELS OR TO A FIELD MOUNTED DEVICE.

o DEVICE WIRING TERMINAL

▲ EXISTING TERMINAL BLOCK LOCATED IN EXISTING TONE TELEMETRY CABINET ANY DEVICE SHOWN WITH DEVICE TERMINALS CONNECTED DIRECTLY TO THESE SYMBOLS WITH SOLID LINES IS LOCATED IN OR ON THE EQUIPMENT

GENERAL NOTES:

1. AN ATTEMPT IS MADE TO SHOW ALL EXISTING EQUIPMENT ON THIS CONTROL LOGIC DIAGRAM, BASED ON THE INFORMATION PROVIDED FROM THE PREVIOUS PROJECT ENTITLED "TRAVIS COUNTY WATER CONTROL AND IMPROVEMENT DISTRICT NO. 10, CONSTRUCTION PLANS FOR WATER IMPROVEMENTS PROJECT NO. 2, PUMP STATION NO. 1" DATED SEPTEMBER, 1981. HOWEVER, THERE ARE NO AVAILABLE AS BUILT RECORDS IDENTIFYING THE EXACT CONFIGURATION/TERMINATION OF CONTROL WIRING WITHIN THE MOTOR CONTROL CENTER, CONTROL PANELS, LIGHTING PANELS, LOADS, ETC., AND THEIR COORDINATION WITH THE EXISTING CONTROL/TELEMETRY SYSTEM. THEREFORE, THE CONTRACTOR MUST EXERCISE EXTREME CARE, VERIFY THE TERMINATION/CONFIGURATION OF SYSTEM WIRING PRIOR TO COMMENCING FULL SCALE DEMOLITION OR RENOVATION ACTIVITIES. FOLLOWING THE DISCOVERY VERIFICATION OF THE EXISTING FIELD CONDITIONS, SHOULD ADJUSTMENTS BECOME A NECESSITY TO THE EXISTING OR PROPOSED SYSTEM (AS APPLICABLE), THE EXISTING DISCOVERED FIELD CONDITIONS MUST BE BROUGHT TO THE ENGINEER'S ATTENTION FOR EXECUTION OF THE NECESSARY ADJUSTMENTS.
2. UNLESS OTHERWISE NOTED AND/OR INDICATED, EQUIPMENT SHOWN IS EXISTING.
3. CLOSELY AND CAREFULLY COORDINATE/VERIFY ALL POINTS OF CONNECTION PRIOR TO COMMENCING INSTALLATION/MODIFICATION ACTIVITIES

REFERENCE DRAWINGS:

E-CWS-001 – E-CWS-003 – TYPICAL PUMP (P4–P6) CONTROL SCHEMATIC

E-CWS-004 – TYPICAL VALVE CONTROL SCHEMATIC

E-CWS-005 – TYPICAL PUMP (P1–P3) CONTROL SCHEMATIC

DATE FIFTH CH... ORIGINAL DRAWING ... OF INCH ... ADJUST SCALE ACCORDINGLY

STATE OF TEXAS
REGISTERED PROFESSIONAL ENGINEER
2/4/2005

HARUTUNIAN ENGINEERING INCORPORATED
ENGINEERING AND ENVIRONMENTAL CONSULTANTS
305 EAST HUNTLAND DRIVE SUITE 500
AUSTIN, TEXAS 78752

REUSE OF DOCUMENTS
This document and the ideas and designs incorporated herein as an instrument of professional service has been developed, designed and prepared by Harutunian Engineering, Inc. and is not to be used, in whole or part, for any other project without the written authorization of Water District No. 10 and Harutunian Engineering, Inc. © 2005

DR. HEI
CH. HEI
APPROVED BY HEI
SUBMITTAL NO.
FEBRUARY 2005
SCALE NONE

TRAVIS COUNTY WATER CONTROL & IMPROVEMENT DISTRICT NO 10
PUMP STATION NO. 1

GENERAL CONTROL SCHEMATICS – EXISTING
(SHEET 2 OF 2)

PROJ. 2002-210 | SHEET 59 | DR. NO. E-CWS-007

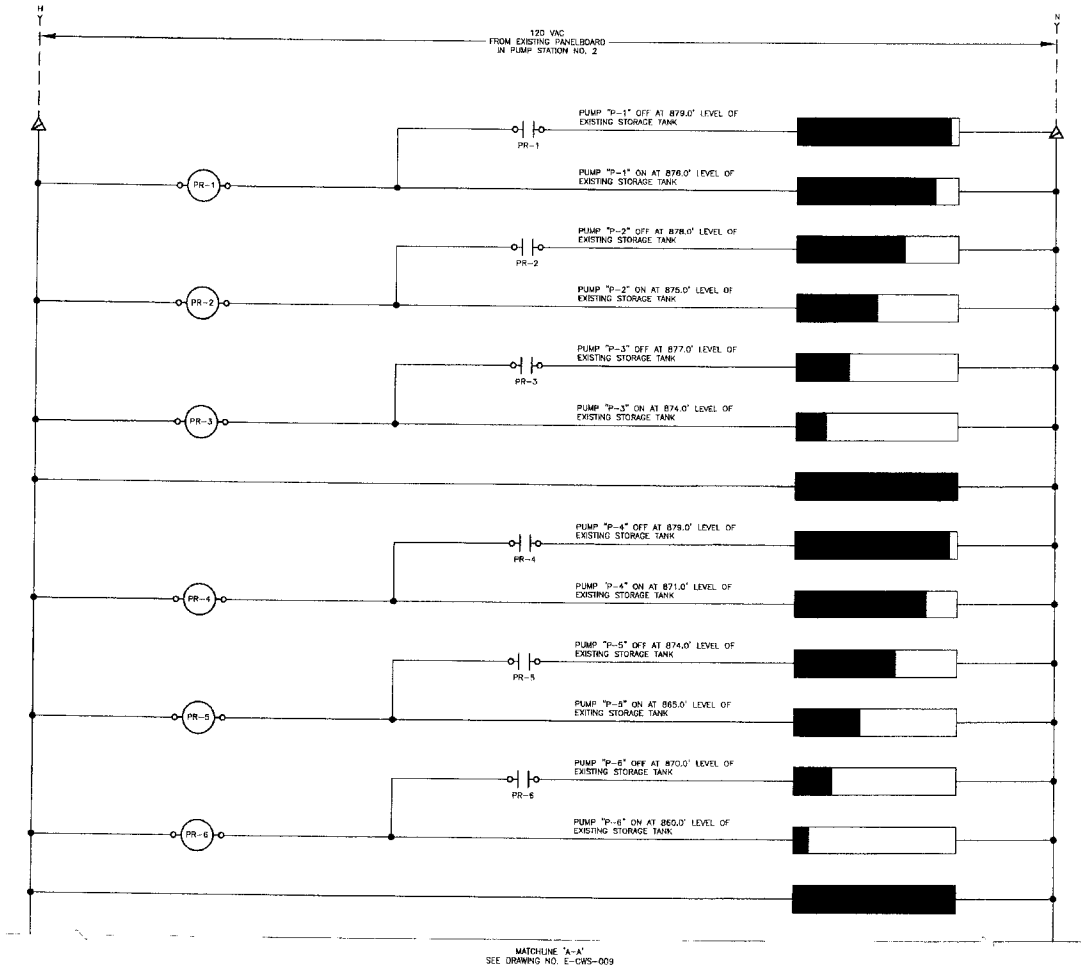

WIRING AND TERMINAL DEVICE LEGEND:

— — INDICATES WIRING BETWEEN PANELS OR TO A FIELD MOUNTED DEVICE.

O DEVICE WIRING TERMINAL

△ EXISTING TERMINAL BLOCK LOCATED IN EXISTING PUMP CONTROLLER AT EXISTING PUMP STATION NO. 2. ANY DEVICE SHOWN WITH DEVICE TERMINALS CONNECTED DIRECTLY TO THESE SYMBOLS WITH SOLID LINES IS LOCATED IN OR ON THE EQUIPMENT

GENERAL NOTES:

1. AN ATTEMPT IS MADE TO SHOW ALL EXISTING EQUIPMENT ON THIS CONTROL LOGIC DIAGRAM, BASED ON THE INFORMATION PROVIDED FROM THE PREVIOUS PROJECT ENTITLED "TRAVIS COUNTY WATER CONTROL AND IMPROVEMENT DISTRICT NO. 10, CONSTRUCTION PLANS FOR WATER IMPROVEMENTS PROJECT NO. 2, PUMP STATION NO. 1" DATED SEPTEMBER, 1981. HOWEVER, THERE ARE NO AVAILABLE AS BUILT RECORDS IDENTIFYING THE EXACT CONFIGURATION/ TERMINATION OF CONTROL WIRING WITHIN THE MOTOR CONTROL CENTER, CONTROL PANELS, LIGHTING PANELS, LOADS, ETC. AND THEIR COORDINATION WITH THE EXISTING CONTROL/TELEMETRY SYSTEM. THEREFORE, THE CONTRACTOR MUST EXERCISE EXTREME CARE, VERIFY THE TERMINATION/ CONFIGURATION OF SYSTEM WIRING PRIOR TO COMMENCING FULL SCALE DEMOLITION OR RENOVATION ACTIVITIES. FOLLOWING THE DISCOVERY VERIFICATION OF THE EXISTING FIELD CONDITIONS, SHOULD ADJUSTMENTS BECOME A NECESSITY TO THE EXISTING OR PROPOSED SYSTEM (AS APPLICABLE), THE EXISTING DISCOVERED FIELD CONDITIONS MUST BE BROUGHT TO THE ENGINEER'S ATTENTION FOR EXECUTION OF THE NECESSARY ADJUSTMENTS.
2. UNLESS OTHERWISE NOTED AND/OR INDICATED, EQUIPMENT SHOWN IS EXISTING.
3. CLOSELY AND CAREFULLY COORDINATE/VERIFY ALL POINTS OF CONNECTION PRIOR TO COMMENCING INSTALLATION/MODIFICATION ACTIVITIES.
4. ALL ITEMS SHOWN ON THIS DRAWING ARE LOCATED AT EXISTING PUMP STATION NO. 2. THESE CONTROLS SHALL REMAIN AND BE USED IN RENOVATION ACTIVITIES FOR PUMP STATION NO. 1

REFERENCE DRAWINGS:

E-CWS-010 – TONE TELEMETRY CONTROL SCHEMATIC

BAR LENGTH DIAGONAL DRAWING EQUALS 24" WHEN ADJUST SCALE ACCORDINGLY

STATE OF TEXAS REGISTERED PROFESSIONAL ENGINEER 2/2/2005

HARUTUNIAN ENGINEERING INCORPORATED
ENGINEERING AND ENVIRONMENTAL CONSULTANTS
303 EAST HUNTLAND DRIVE SUITE 500
AUSTIN, TEXAS 78752

REUSE OF DOCUMENTS
This document and the ideas and designs incorporated herein as an instrument of professional service has been developed, designed and prepared by Harutunian Engineering, Inc. and is not to be used, in whole or part, for any other project without the written authorization of Water District No. 10 and Harutunian Engineering, Inc. © 2005

HEI
HEI
HEI
FEBRUARY 2005
NONE

TRAVIS COUNTY WATER CONTROL & IMPROVEMENT DISTRICT NO 10
PUMP STATION NO. 1

PUMP STATION NO. 2
PUMP CONTROLLER CONTROL SCHEMATIC – EXISTING
(SHEET 1 OF 2)

2002-210 | SHEET 60 | E-CWS-008

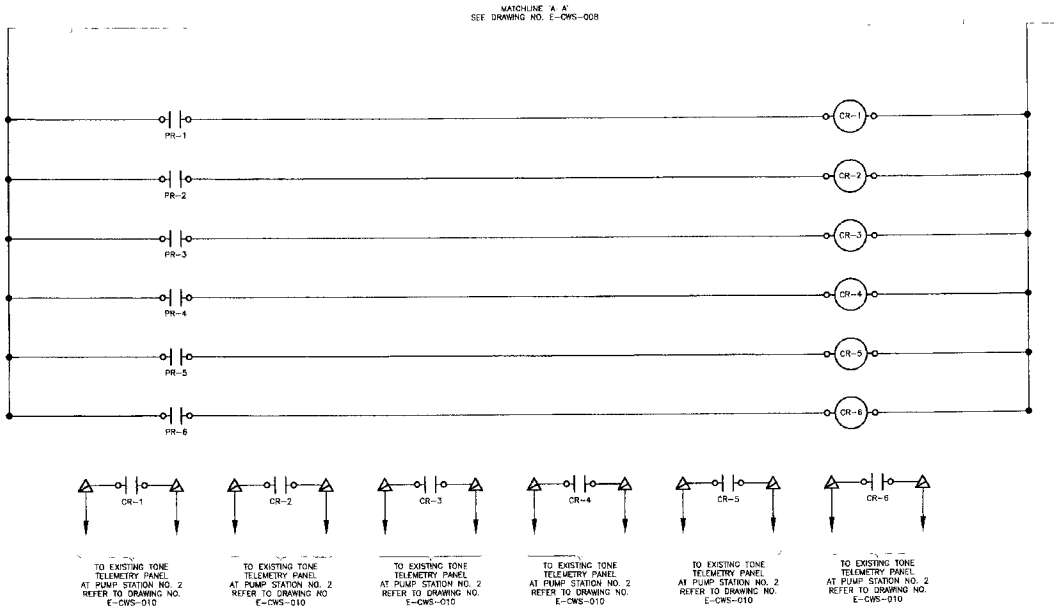

WIRING AND TERMINAL DEVICE LEGEND.

— — INDICATES WIRING BETWEEN PANELS OR TO A FIELD MOUNTED DEVICE.

o DEVICE WIRING TERMINAL

△ EXISTING TERMINAL BLOCK LOCATED IN EXISTING PUMP CONTROLLER AT EXISTING PUMP STATION NO. 2. ANY DEVICE SHOWN WITH DEVICE TERMINALS CONNECTED DIRECTLY TO THESE SYMBOLS WITH SOLID LINES IS LOCATED IN OR ON THE EQUIPMENT

GENERAL NOTES.

1. AN ATTEMPT IS MADE TO SHOW ALL EXISTING EQUIPMENT ON THIS CONTROL LOGIC DIAGRAM, BASED ON THE INFORMATION PROVIDED FROM THE PREVIOUS PROJECT ENTITLED "TRAVIS COUNTY WATER CONTROL AND IMPROVEMENT DISTRICT NO. 10, CONSTRUCTION PLANS FOR WATER IMPROVEMENTS PROJECT NO. 2, PUMP STATION NO. 1" DATED SEPTEMBER, 1981. HOWEVER, THERE ARE NO AVAILABLE AS BUILT RECORDS IDENTIFYING THE EXACT CONFIGURATION/ TERMINATION OF CONTROL WIRING WITHIN THE MOTOR CONTROL CENTER, CONTROL PANELS, LIGHTING PANELS, LOADS, ETC. AND THEIR COORDINATION WITH THE EXISTING CONTROL/TELEMETRY SYSTEM. THEREFORE, THE CONTRACTOR MUST EXERCISE EXTREME CARE, VERIFY THE TERMINATION/ CONFIGURATION OF SYSTEM WIRING PRIOR TO COMMENCING FULL SCALE DEMOLITION OR RENOVATION ACTIVITIES. FOLLOWING THE DISCOVERY VERIFICATION OF THE EXISTING FIELD CONDITIONS, SHOULD ADJUSTMENTS BECOME A NECESSITY TO THE EXISTING OR PROPOSED SYSTEM (AS APPLICABLE), THE EXISTING DISCOVERED FIELD CONDITIONS MUST BE BROUGHT TO THE ENGINEER'S ATTENTION FOR EXECUTION OF THE NECESSARY ADJUSTMENTS.
2. UNLESS OTHERWISE NOTED AND/OR INDICATED, EQUIPMENT SHOWN IS EXISTING.
3. CLOSELY AND CAREFULLY COORDINATE/VERIFY ALL POINTS OF CONNECTION PRIOR TO COMMENCING INSTALLATION/MODIFICATION ACTIVITIES.
4. ALL ITEMS SHOWN ON THIS DRAWING ARE LOCATED AT EXISTING PUMP STATION NO. 2. THESE CONTROLS SHALL REMAIN AND BE USED IN RENOVATION ACTIVITIES FOR PUMP STATION NO. 1

REFERENCE DRAWINGS.

E-CWS-010 – TONE TELEMETRY CONTROL SCHEMATIC

K. A. Harutunian
STATE OF TEXAS
HARUTUNIAN
REGISTERED
PROFESSIONAL ENGINEER
2/21/2005

HARUTUNIAN ENGINEERING INCORPORATED
ENGINEERING AND ENVIRONMENTAL CONSULTANTS
305 EAST HUNTLAND DRIVE SUITE 500
AUSTIN, TEXAS 78752

REUSE OF DOCUMENTS
This document and the ideas and designs incorporated herein as an instrument of professional service has been developed, designed and prepared by Harutunian Engineering, Inc. and is not to be used, in whole or part, for any other project without the written authorization of Water District No. 10 and Harutunian Engineering, Inc. © 2005

HEI
HEI
HEI
FEBRUARY 2005
NONE

TRAVIS COUNTY WATER CONTROL & IMPROVEMENT DISTRICT NO 10
PUMP STATION NO. 1

PUMP STATION NO 2
PUMP CONTROLLER CONTROL SCHEMATIC – EXISTING
(SHEET 2 OF 2)

2002-210 | SHEET 61 | E-CWS-009

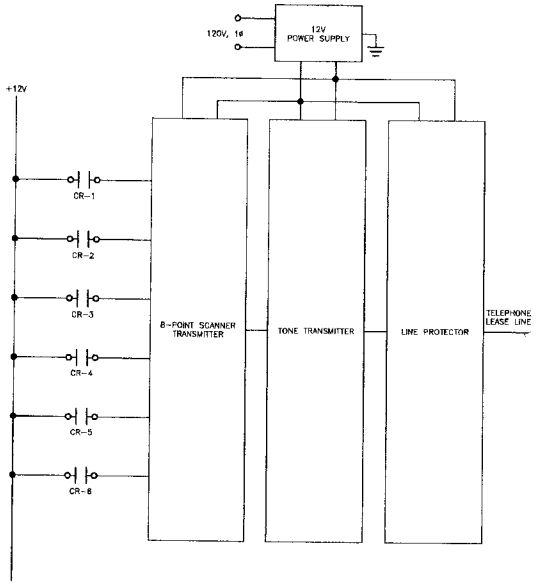

TONE TELEMETRY SYSTEM
LOCATED AT PUMP STATION NO. 2 – EXISTING

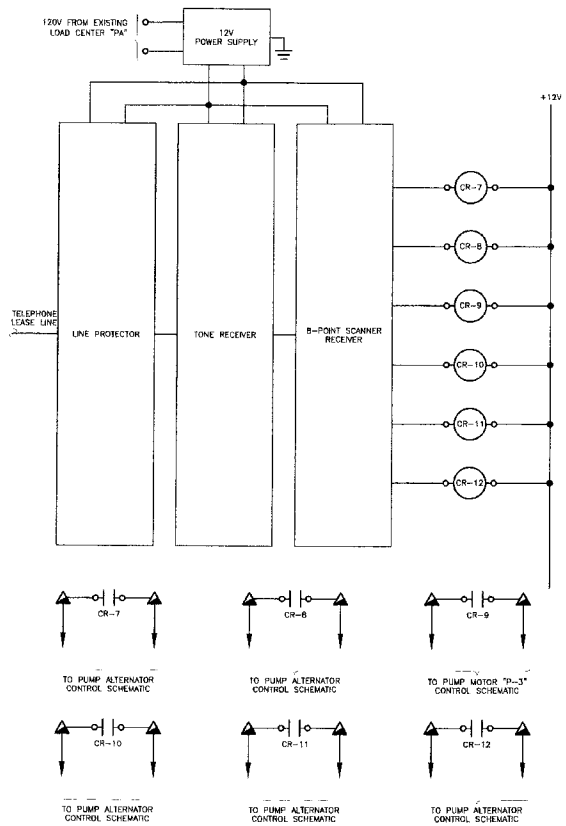

TONE TELEMETRY SYSTEM
LOCATED AT PUMP STATION NO. 1 – EXISTING

WIRING AND TERMINAL DEVICE LEGEND:

— — INDICATES WIRING BETWEEN PANELS OR TO A FIELD MOUNTED DEVICE.

o DEVICE WIRING TERMINAL

▲ EXISTING TERMINAL BLOCK LOCATED IN EXISTING TONE TELEMETRY CABINET. ANY DEVICE SHOWN WITH DEVICE TERMINALS CONNECTED DIRECTLY TO THESE SYMBOLS WITH SOLID LINES IS LOCATED IN OR ON THE EQUIPMENT.

GENERAL NOTES:

1. AN ATTEMPT IS MADE TO SHOW ALL EXISTING EQUIPMENT ON THIS CONTROL LOGIC DIAGRAM, BASED ON THE INFORMATION PROVIDED FROM THE PREVIOUS PROJECT ENTITLED "TRAVIS COUNTY WATER CONTROL AND IMPROVEMENT DISTRICT NO. 10, CONSTRUCTION PLANS FOR WATER IMPROVEMENTS PROJECT NO. 2, PUMP STATION NO. 1" DATED SEPTEMBER, 1981. HOWEVER, THERE ARE NO AVAILABLE AS BUILT RECORDS IDENTIFYING THE EXACT CONFIGURATION/TERMINATION OF CONTROL WIRING WITHIN THE MOTOR CONTROL CENTER, CONTROL PANELS, LIGHTING PANELS, LOADS, ETC., AND THEIR COORDINATION WITH THE EXISTING CONTROL/TELEMETRY SYSTEM. THEREFORE, THE CONTRACTOR MUST EXERCISE EXTREME CARE, VERIFY THE TERMINATION/CONFIGURATION OF SYSTEM WIRING PRIOR TO COMMENCING FULL SCALE DEMOLITION OR RENOVATION ACTIVITIES. FOLLOWING THE DISCOVERY VERIFICATION OF THE EXISTING FIELD CONDITIONS, SHOULD ADJUSTMENTS BECOME A NECESSITY TO THE EXISTING OR PROPOSED SYSTEM (AS APPLICABLE), THE EXISTING DISCOVERED FIELD CONDITIONS MUST BE BROUGHT TO THE ENGINEER'S ATTENTION FOR EXECUTION OF THE NECESSARY ADJUSTMENTS.
2. UNLESS OTHERWISE NOTED AND/OR INDICATED, EQUIPMENT SHOWN IS EXISTING.
3. CLOSELY AND CAREFULLY COORDINATE/VERIFY ALL POINTS OF CONNECTION PRIOR TO COMMENCING INSTALLATION/MODIFICATION ACTIVITIES.

REFERENCE DRAWINGS:

E-CWS-001 – E-CWS-009 – CONTROL SCHEMATICS

BAR LENGTH ON ORIGINAL DRAWING EQUALS ONE INCH. ADJUST SCALE ACCORDINGLY

2/21/2005

HARUTUNIAN ENGINEERING INCORPORATED
ENGINEERING AND ENVIRONMENTAL CONSULTANTS
305 EAST HUNTLAND DRIVE SUITE 500
AUSTIN, TEXAS 78752

REUSE OF DOCUMENTS
This document and the ideas and designs incorporated herein as an instrument of professional service has been developed, designed and prepared by Harutunian Engineering, Inc. and is not to be used, in whole or part, for any other project without the written authorization of Water District No. 10 and Harutunian Engineering, Inc. © 2001

HEI
HEI
HEI
FEBRUARY 2005
NONE

TRAVIS COUNTY WATER CONTROL & IMPROVEMENT DISTRICT NO 10
PUMP STATION NO. 1

TONE TELEMETRY SYSTEM – EXISTING

2002-210 | SHEET 62 | E-CWS-010

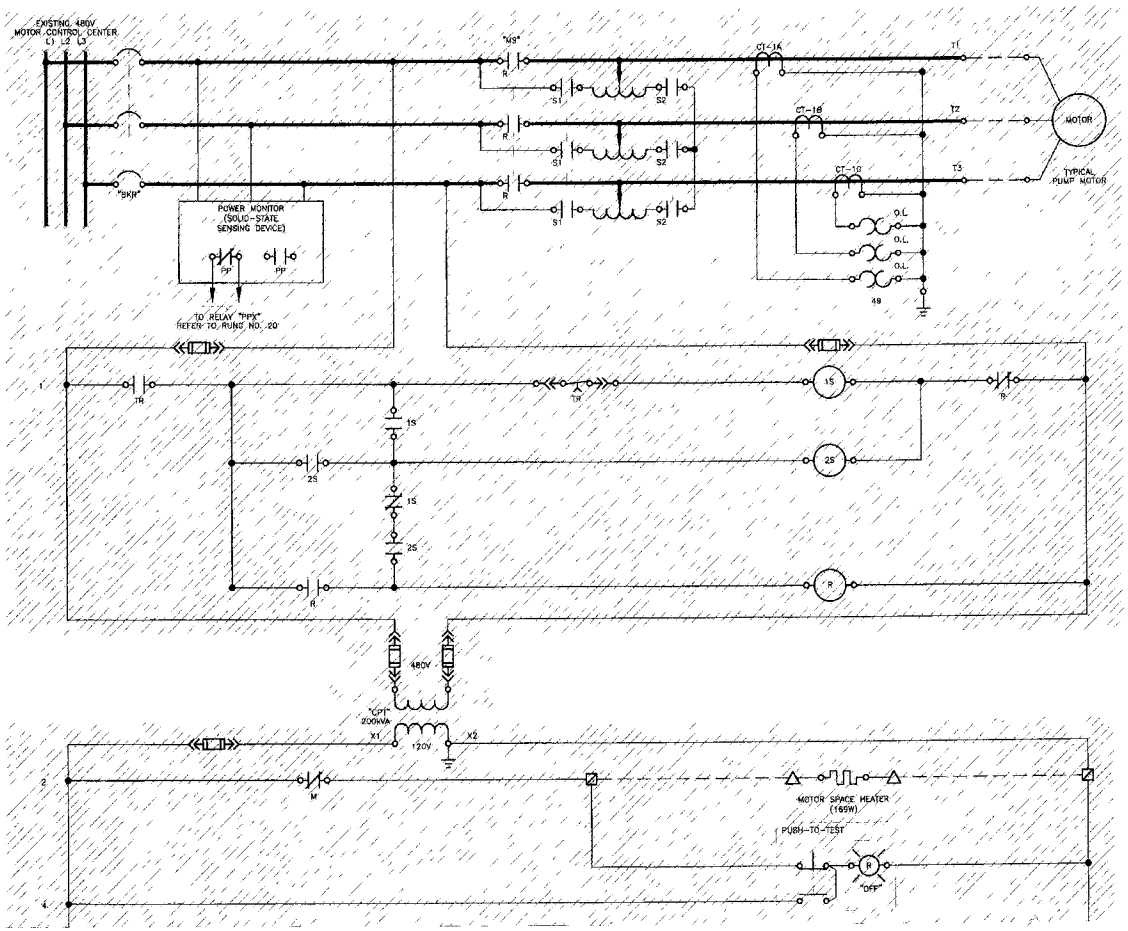

WIRING AND TERMINAL DEVICE LEGEND:

— — INDICATES WIRING BETWEEN PANELS OR TO A FIELD MOUNTED DEVICE.

o DEVICE WIRING TERMINAL

▨ EXISTING TERMINAL BLOCK LOCATED IN EXISTING 480V MOTOR CONTROL CENTER (MCC). ANY DEVICE SHOWN WITH DEVICE WIRING TERMINALS CONNECTED DIRECTLY TO THESE SYMBOLS WITH SOLID LINES IS ALSO LOCATED IN EXISTING 480V MCC.

▲ EXISTING TERMINAL BLOCK LOCATED IN EXISTING FONE TELEMETRY CABINET. ANY DEVICE SHOWN WITH DEVICE TERMINALS CONNECTED DIRECTLY TO THESE SYMBOLS WITH SOLID LINES IS LOCATED IN OR ON THE EQUIPMENT

△ EXISTING TERMINAL BLOCK LOCATED IN FIELD MOUNTED EQUIPMENT AS NOTED. ANY DEVICE SHOWN WITH DEVICE WIRING TERMINALS CONNECTED DIRECTLY TO THESE SYMBOLS WITH SOLID LINES IS LOCATED IN OR ON THE EQUIPMENT

GENERAL NOTES:

1. AN ATTEMPT IS MADE TO SHOW ALL EXISTING EQUIPMENT ON THIS ELECTRICAL CONTROL SCHEMATIC. REGARDLESS, THE CONTRACTOR IS RESPONSIBLE FOR VERIFYING THE APPLICABLE CONDUIT/WIRING FOR ELECTRICAL CONTROLS TO EXISTING EQUIPMENT WHETHER SHOWN HERE OR NOT. THE INFORMATION SHOWN HEREIN SHALL NOT RELIEVE THE CONTRACTOR THE RESPONSIBILITY OF CONFIRMING OR FINDING THE MOTOR CONTROL CENTER/CIRCUIT NUMBER/PANELBOARD/ETC. SERVING THE EXISTING LOAD. THE CONTRACTOR SHALL EXERCISE EVERY PRECAUTION TO ELIMINATE HAZARDS IN DISCONNECTING ANY DEVICE FROM AN ELECTRICAL CIRCUIT. THE CONTRACTOR MUST EXERCISE EXTREME CARE AS THERE ARE NO AVAILABLE AS BUILT RECORDS IDENTIFYING THE ROUTING OF ALL CONDUIT/WIRING BETWEEN THE VARIOUS MOTOR CONTROL CENTERS, CONTROL PANELS, LIGHTING PANELS, LOADS, ETC., AND THEIR COORDINATION WITH THE EXISTING ELECTRICAL SYSTEM. THEREFORE, THE CONTRACTOR IS TO EXERCISE EXTREME CARE, VERIFY THE ROUTING OF EXISTING CONDUIT/WIRING PRIOR TO COMMENCING FULL SCALE DEMOLITION OR RENOVATION ACTIVITIES. FOLLOWING THE DISCOVERY VERIFICATION OF THE EXISTING FIELD CONDITIONS, SHOULD ADJUSTMENTS BECOME A NECESSITY TO THE EXISTING OR PROPOSED SYSTEM (AS APPLICABLE), THE EXISTING DISCOVERED FIELD CONDITIONS MUST BE BROUGHT TO THE ENGINEER'S ATTENTION FOR EXECUTION OF THE NECESSARY ADJUSTMENTS/MODIFICATIONS.
2. THE CONTRACTOR SHALL BE AWARE THAT WHEN ANY EXISTING EQUIPMENT IS DISCONNECTED, REMOVED, RELOCATED OR OTHERWISE MODIFIED, THE POSSIBILITY MAY EXIST FOR SUCH ACTION TO LEAD TO INTERRUPTION OF OPERATION OF THE PUMP STATION. IF EXTREME CARE, VERIFICATION, AND VALIDATION IS NOT CAREFULLY EXERCISED PRIOR TO COMMENCEMENT OF SUCH DEMOLITION ACTIVITY, THE CONTRACTOR SHALL KNOW THAT ANY UNSCHEDULED INTERRUPTION TO THE CONTINUITY OF PUMP STATION OPERATION AT ITS EXPECTED PUMPING CAPACITY IS UNACCEPTABLE DURING THE CONSTRUCTION COURSE OF THIS PROJECT. HOWEVER, SHOULD ANY INTERRUPTION TO PUMP STATION OPERATION OCCUR FOR ANY UNFORESEEN REASON, WHETHER TOTALLY ACCIDENTAL OR DUE TO IMPROPER FIELD INVESTIGATION AND IMPROPER PLANNING PRIOR TO COMMENCEMENT OF THE ELECTRICAL/INSTRUMENTATION DEMOLITION EFFORT, THE RESPONSIBLE CONTRACTOR SHALL DETERMINE THE PROBLEM, CORRECT IT, AND START UP THE INTERRUPTED EQUIPMENT WITHIN A CERTAIN TIME PERIOD AS DETERMINED BY THE OWNER AT NO ADDITIONAL COST TO THE OWNER. THE CONTRACTOR SHALL PROVIDE CONTINUOUS, 24-HOUR, LABOR, EQUIPMENT, MATERIAL, AND ACCESSORIES UNTIL SUCH TIME THAT ANY AFFECTED EQUIPMENT OPERATES AS PREVIOUSLY OPERATED, AT NO ADDITIONAL COST TO THE OWNER AND TO THE OWNER'S SATISFACTION.
3. ALL EQUIPMENT DEPICTED ON THIS DRAWING IS EXISTING. CROSSHATCHED LINEWORK DENOTES EQUIPMENT TO BE DEMOLITIONED UNLESS OTHERWISE NOTED AND SHALL BE REMOVED IN ACCORDANCE WITH THE RECOMMENDED CONSTRUCTION SEQUENCE ON DRAWING NO. E-SP-001. ALL DEMOLITION ACTIVITIES SHALL ALSO BE FULLY COORDINATED WITH MECHANICAL DEMOLITION ACTIVITIES. ALL DEMOLISHED ITEMS SHALL REMAIN THE PROPERTY OF THE OWNER. RELOCATE ALL DEMOLISHED ITEMS TO LOCATION(S) SPECIFIED BY THE OWNER AT NO ADDITIONAL COST TO THE OWNER.
4. EQUIPMENT/CONDUIT TAGS/NAMES HAVE BEEN ARBITRARILY ASSIGNED TO AID IN THE DRAWINGS. SOME EXISTING TAGS/NAMES HAVE BEEN USED WHERE POSSIBLE. CONTRACTOR SHALL MAKE EXTENSIVE VERIFICATION OF EXISTING EQUIPMENT PRIOR TO COMMENCING FULL SCALE DEMOLITION/RENOVATION ACTIVITIES.
5. TYPICAL EXISTING PUMPING UNIT CONTROL LOGIC SHOWN HERE. THIS EXISTING CONTROL LOGIC IS TYPICAL FOR PUMPS "P-4", "P-5", AND "P-6".

REFERENCE DRAWINGS:

E-SP-001 – CONSTRUCTION SEQUENCE

E-OL-004 – E-OL-005 – ONE-LINE DIAGRAM

E-CWS-014 – TYPICAL VALVE CONTROL SCHEMATIC

E-CWS-016 – E-CWS-017 – GENERAL CONTROL SCHEMATIC

BAR LENGTH ON ORIGINAL DRAWING IS 1 INCH. ADJUST SCALE ACCORDINGLY

STATE OF TEXAS — K. A. HARUTUNIAN — 2/2/2005

HARUTUNIAN ENGINEERING INCORPORATED
ENGINEERING AND ENVIRONMENTAL CONSULTANTS
305 EAST HUNTLAND DRIVE SUITE 500
AUSTIN, TEXAS 78752

REUSE OF DOCUMENTS
This document and the ideas and designs incorporated herein as an instrument of professional service has been developed, designed and prepared by Harutunian Engineering, Inc. and is not to be used, in whole or part, for any other project without the written authorization of Water District No. 10 and Harutunian Engineering, Inc. © 2005

DESIGNED BY HEI
DRAWN BY HEI
APPROVED BY HEI
DATE FEBRUARY 2005
SCALE NONE

TRAVIS COUNTY WATER CONTROL & IMPROVEMENT DISTRICT NO. 10
PUMP STATION NO. 1

TYPICAL PUMPING UNIT "P-4", "P-5", AND "P-6" CONTROL SCHEMATIC – DEMOLITION (SHEET 1 OF 3)

PROJ. NO. 2002-210 | SHEET 63 | DWG. NO. E-CWS-011

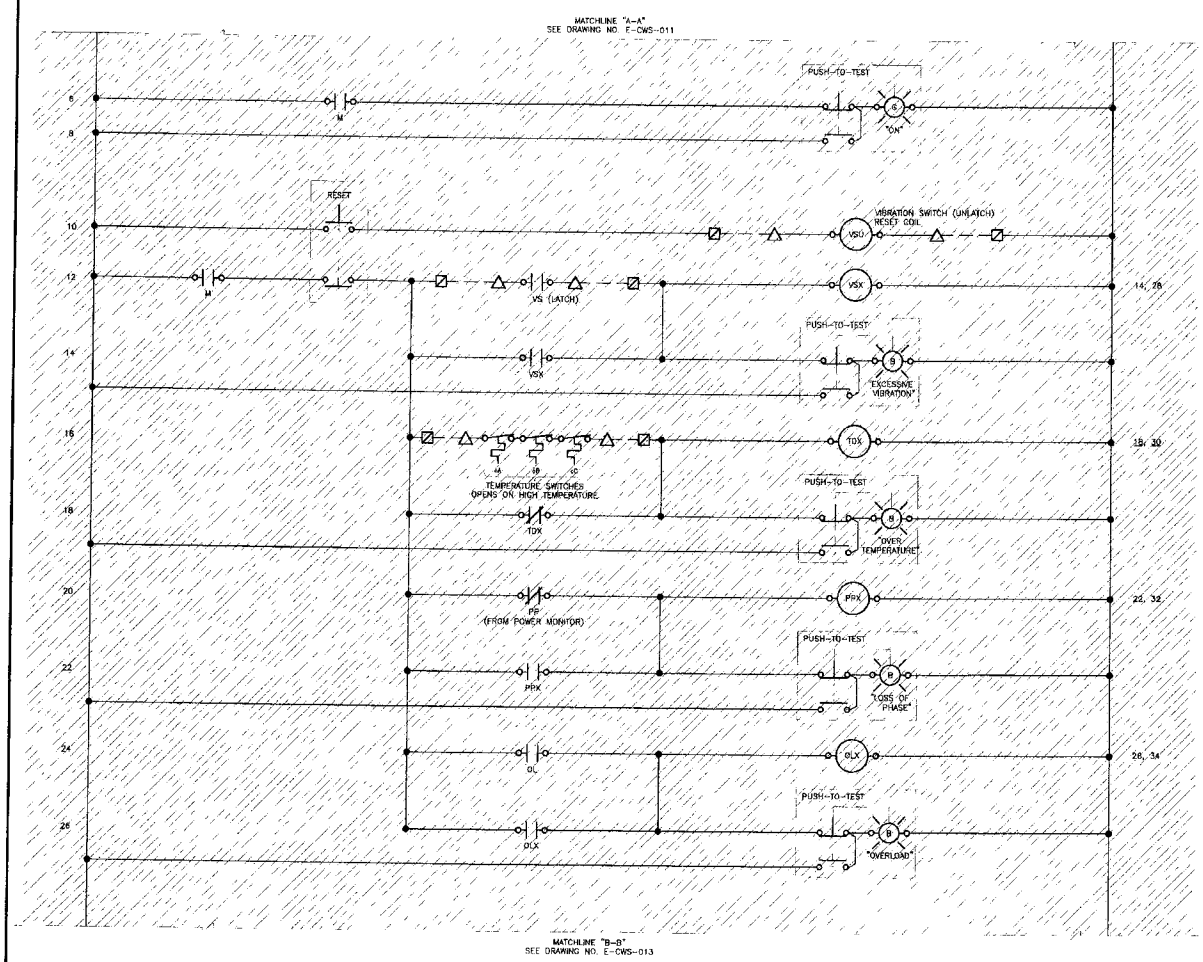

WIRING AND TERMINAL DEVICE LEGEND:

- — — INDICATES WIRING BETWEEN PANELS OR TO A FIELD MOUNTED DEVICE.
- o DEVICE WIRING TERMINAL
- ▨ EXISTING TERMINAL BLOCK LOCATED IN EXISTING 480V MOTOR CONTROL CENTER (MCC). ANY DEVICE SHOWN WITH DEVICE WIRING TERMINALS CONNECTED DIRECTLY TO THESE SYMBOLS WITH SOLID LINES IS ALSO LOCATED IN EXISTING 480V MCC.
- ▲ EXISTING TERMINAL BLOCK LOCATED IN EXISTING TONE TELEMETRY CABINET. ANY DEVICE SHOWN WITH DEVICE TERMINALS CONNECTED DIRECTLY TO THESE SYMBOLS WITH SOLID LINES IS LOCATED IN OR ON THE EQUIPMENT
- △ EXISTING TERMINAL BLOCK LOCATED IN FIELD MOUNTED EQUIPMENT AS NOTED. ANY DEVICE SHOWN WITH DEVICE WIRING TERMINALS CONNECTED DIRECTLY TO THESE SYMBOLS WITH SOLID LINES IS LOCATED IN OR ON THE EQUIPMENT

GENERAL NOTES:

1. AN ATTEMPT IS MADE TO SHOW ALL EXISTING EQUIPMENT ON THIS ELECTRICAL CONTROL SCHEMATIC. REGARDLESS, THE CONTRACTOR IS RESPONSIBLE FOR VERIFYING THE APPLICABLE CONDUIT/WIRING FOR ELECTRICAL CONTROLS TO EXISTING EQUIPMENT WHETHER SHOWN HERE OR NOT. THE INFORMATION SHOWN HEREIN SHALL NOT RELIEVE THE CONTRACTOR THE RESPONSIBILITY OF CONFIRMING OR FINDING THE MOTOR CONTROL CENTER/CIRCUIT NUMBER/PANELBOARD/ETC., SERVING THE EXISTING LOAD. THE CONTRACTOR SHALL EXERCISE EVERY PRECAUTION TO ELIMINATE HAZARDS IN DISCONNECTING ANY DEVICE FROM AN ELECTRICAL CIRCUIT. THE CONTRACTOR MUST EXERCISE EXTREME CARE AS THERE ARE NO AVAILABLE AS BUILT RECORDS IDENTIFYING THE ROUTING OF ALL CONDUIT/WIRING BETWEEN THE VARIOUS MOTOR CONTROL CENTERS, CONTROL PANELS, LIGHTING PANELS, LOADS, ETC., AND THEIR COORDINATION WITH THE EXISTING ELECTRICAL SYSTEM. THEREFORE, THE CONTRACTOR IS TO EXERCISE EXTREME CARE, VERIFY THE ROUTING OF EXISTING CONDUIT/WIRING PRIOR TO COMMENCING FULL SCALE DEMOLITION OR RENOVATION ACTIVITIES. FOLLOWING THE DISCOVERY VERIFICATION OF THE EXISTING FIELD CONDITIONS, SHOULD ADJUSTMENTS BECOME A NECESSITY TO THE EXISTING OR PROPOSED SYSTEM (AS APPLICABLE), THE EXISTING DISCOVERED FIELD CONDITIONS MUST BE BROUGHT TO THE ENGINEER'S ATTENTION FOR EXECUTION OF THE NECESSARY ADJUSTMENTS/MODIFICATIONS.
2. THE CONTRACTOR SHALL BE AWARE THAT WHEN ANY EXISTING EQUIPMENT IS DISCONNECTED, REMOVED, RELOCATED OR OTHERWISE MODIFIED, THE POSSIBILITY MAY EXIST FOR SUCH ACTION TO LEAD TO INTERRUPTION OF OPERATION OF THE PUMP STATION. IF EXTREME CARE, VERIFICATION, AND VALIDATION IS NOT CAREFULLY EXERCISED PRIOR TO COMMENCEMENT OF SUCH DEMOLITION ACTIVITY, THE CONTRACTOR SHALL KNOW THAT ANY UNSCHEDULED INTERRUPTION TO THE CONTINUITY OF PUMP STATION OPERATION AT ITS EXPECTED PUMPING CAPACITY IS UNACCEPTABLE DURING THE CONSTRUCTION COURSE OF THIS PROJECT. HOWEVER, SHOULD ANY INTERRUPTION TO PUMP STATION OPERATION OCCUR FOR ANY UNFORESEEN REASON, WHETHER TOTALLY ACCIDENTAL OR DUE TO IMPROPER FIELD INVESTIGATION AND IMPROPER PLANNING PRIOR TO COMMENCEMENT OF THE ELECTRICAL/INSTRUMENTATION DEMOLITION EFFORT, THE RESPONSIBLE CONTRACTOR SHALL DETERMINE THE PROBLEM, CORRECT IT, AND START UP THE INTERRUPTED EQUIPMENT WITHIN A CERTAIN TIME PERIOD AS DETERMINED BY THE OWNER AT NO ADDITIONAL COST TO THE OWNER. THE CONTRACTOR SHALL PROVIDE CONTINUOUS, 24-HOUR, LABOR, EQUIPMENT, MATERIAL, AND ACCESSORIES UNTIL SUCH TIME THAT ANY AFFECTED EQUIPMENT OPERATES AS PREVIOUSLY OPERATED, AT NO ADDITIONAL COST TO THE OWNER AND TO THE OWNER'S SATISFACTION.
3. ALL EQUIPMENT DEPICTED ON THIS DRAWING IS EXISTING. CROSSHATCHED LINEWORK DENOTES EQUIPMENT TO BE DEMOLITIONED UNLESS OTHERWISE NOTED AND SHALL BE REMOVED IN ACCORDANCE WITH THE RECOMMENDED CONSTRUCTION SEQUENCE ON DRAWING NO. E-SP-001. ALL DEMOLITION ACTIVITIES SHALL ALSO BE FULLY COORDINATED WITH MECHANICAL DEMOLITION ACTIVITIES. ALL DEMOLISHED ITEMS SHALL REMAIN THE PROPERTY OF THE OWNER. RELOCATE ALL DEMOLISHED ITEMS TO LOCATION(S) SPECIFIED BY THE OWNER AT NO ADDITIONAL COST TO THE OWNER.
4. EQUIPMENT/CONDUIT TAGS/NAMES HAVE BEEN ARBITRARILY ASSIGNED TO AID IN THE DRAWINGS. SOME EXISTING TAGS/NAMES HAVE BEEN USED WHERE POSSIBLE. CONTRACTOR SHALL MAKE EXTENSIVE VERIFICATION OF EXISTING EQUIPMENT PRIOR TO COMMENCING FULL SCALE DEMOLITION/RENOVATION ACTIVITIES.
5. TYPICAL EXISTING PUMPING UNIT CONTROL LOGIC SHOWN HERE. THIS EXISTING CONTROL LOGIC IS TYPICAL FOR PUMPS "P-4", "P-5", AND "P-6"

REFERENCE DRAWINGS:

E-SP-001 – CONSTRUCTION SEQUENCE

E-OL-004 – E-OL-005 – ONE-LINE DIAGRAM

E-CWS-014 – TYPICAL VALVE CONTROL SCHEMATIC

E-CWS-016 – E-CWS-017 – GENERAL CONTROL SCHEMATIC

BAR LENGTH ON ORIGINAL DRAWING IS ONE INCH. ADJUST SCALE ACCORDINGLY

STATE OF TEXAS — K. A. SHULTZ — 78757 — REGISTERED PROFESSIONAL ENGINEER — 2/2/2005

HARUTUNIAN ENGINEERING INCORPORATED
ENGINEERING AND ENVIRONMENTAL CONSULTANTS
305 EAST HUNTLAND DRIVE SUITE 500
AUSTIN, TEXAS 78752

REUSE OF DOCUMENTS
This document and the ideas and designs incorporated herein as an instrument of professional service has been developed, designed and prepared by Harutunian Engineering, Inc. and is not to be used, in whole or part, for any other project without the written authorization of Water District No. 10 and Harutunian Engineering, Inc. © 2005

DRAWN BY HEI
CHECKED BY HEI
APPROVED BY HEI
SUBMITTED BY HEI
DATE FEBRUARY 2005
SCALE NONE

TRAVIS COUNTY WATER CONTROL & IMPROVEMENT DISTRICT NO 10
PUMP STATION NO. 1

TYPICAL PUMPING UNIT "P-4", "P-5", AND "P-6" CONTROL SCHEMATIC – DEMOLITION (SHEET 2 OF 3)

PROJECT ID 2002-210 | SHEET 64 | DWG # E-CWS-012

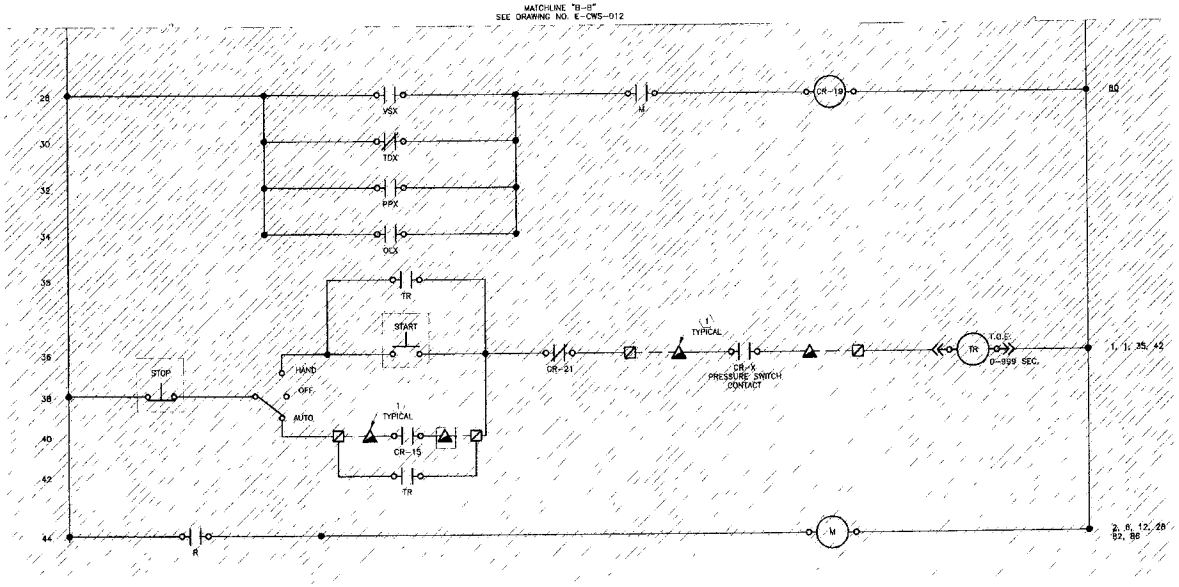

KEY NOTES.

(1) DISCONNECT AND REMOVE EXISTING WIRE CONNECTED TO EXISTING TERMINAL BLOCK LOCATED IN EXISTING TONE TELEMETRY CABINET. EXISTING TERMINAL BLOCK SHALL REMAIN.

WIRING AND TERMINAL DEVICE LEGEND.

— — INDICATES WIRING BETWEEN PANELS OR TO A FIELD MOUNTED DEVICE.

o DEVICE WIRING TERMINAL

☑ EXISTING TERMINAL BLOCK LOCATED IN EXISTING 480V MOTOR CONTROL CENTER (MCC). ANY DEVICE SHOWN WITH DEVICE WIRING TERMINALS CONNECTED DIRECTLY TO THESE SYMBOLS WITH SOLID LINES IS ALSO LOCATED IN EXISTING 480V MCC.

▲ EXISTING TERMINAL BLOCK LOCATED IN EXISTING TONE TELEMETRY CABINET. ANY DEVICE SHOWN WITH DEVICE TERMINALS CONNECTED DIRECTLY TO THESE SYMBOLS WITH SOLID LINES IS LOCATED IN OR ON THE EQUIPMENT

△ EXISTING TERMINAL BLOCK LOCATED IN FIELD MOUNTED EQUIPMENT AS NOTED. ANY DEVICE SHOWN WITH DEVICE WIRING TERMINALS CONNECTED DIRECTLY TO THESE SYMBOLS WITH SOLID LINES IS LOCATED IN OR ON THE EQUIPMENT

GENERAL NOTES.

1. AN ATTEMPT IS MADE TO SHOW ALL EXISTING EQUIPMENT ON THIS ELECTRICAL CONTROL SCHEMATIC. REGARDLESS, THE CONTRACTOR IS RESPONSIBLE FOR VERIFYING THE APPLICABLE CONDUIT/WIRING FOR ELECTRICAL CONTROLS TO EXISTING EQUIPMENT WHETHER SHOWN HERE OR NOT. THE INFORMATION SHOWN HEREIN SHALL NOT RELIEVE THE CONTRACTOR THE RESPONSIBILITY OF CONFIRMING OR FINDING THE MOTOR CONTROL CENTER/CIRCUIT NUMBER/PANELBOARD/ETC., SERVING THE EXISTING LOAD. THE CONTRACTOR SHALL EXERCISE EVERY PRECAUTION TO ELIMINATE HAZARDS IN DISCONNECTING ANY DEVICE FROM AN ELECTRICAL CIRCUIT. THE CONTRACTOR MUST EXERCISE EXTREME CARE AS THERE ARE NO AVAILABLE AS BUILT RECORDS IDENTIFYING THE ROUTING OF ALL CONDUIT/WIRING BETWEEN THE VARIOUS MOTOR CONTROL CENTERS, CONTROL PANELS, LIGHTING PANELS, LOADS, ETC., AND THEIR COORDINATION WITH THE EXISTING ELECTRICAL SYSTEM. THEREFORE, THE CONTRACTOR IS TO EXERCISE EXTREME CARE, VERIFY THE ROUTING OF EXISTING CONDUIT/WIRING PRIOR TO COMMENCING FULL SCALE DEMOLITION OR RENOVATION ACTIVITIES. FOLLOWING THE DISCOVERY VERIFICATION OF THE EXISTING FIELD CONDITIONS, SHOULD ADJUSTMENTS BECOME A NECESSITY TO THE EXISTING OR PROPOSED SYSTEM (AS APPLICABLE), THE EXISTING DISCOVERED FIELD CONDITIONS MUST BE BROUGHT TO THE ENGINEER'S ATTENTION FOR EXECUTION OF THE NECESSARY ADJUSTMENTS/MODIFICATIONS.

2. THE CONTRACTOR SHALL BE AWARE THAT WHEN ANY EXISTING EQUIPMENT IS DISCONNECTED, REMOVED, RELOCATED OR OTHERWISE MODIFIED, THE POSSIBILITY MAY EXIST FOR SUCH ACTION TO LEAD TO INTERRUPTION OF OPERATION OF THE PUMP STATION. IF EXTREME CARE, VERIFICATION, AND VALIDATION IS NOT CAREFULLY EXERCISED PRIOR TO COMMENCEMENT OF SUCH DEMOLITION ACTIVITY. THE CONTRACTOR SHALL KNOW THAT ANY UNSCHEDULED INTERRUPTION TO THE CONTINUITY OF PUMP STATION OPERATION AT ITS EXPECTED PUMPING CAPACITY IS UNACCEPTABLE DURING THE CONSTRUCTION COURSE OF THIS PROJECT. HOWEVER, SHOULD ANY INTERRUPTION TO PUMP STATION OPERATION OCCUR FOR ANY UNFORESEEN REASON, WHETHER TOTALLY ACCIDENTAL OR DUE TO IMPROPER FIELD INVESTIGATION AND IMPROPER PLANNING PRIOR TO COMMENCEMENT OF THE ELECTRICAL/INSTRUMENTATION DEMOLITION EFFORT, THE RESPONSIBLE CONTRACTOR SHALL DETERMINE THE PROBLEM, CORRECT IT, AND START UP THE INTERRUPTED EQUIPMENT WITHIN A CERTAIN TIME PERIOD AS DETERMINED BY THE OWNER AT NO ADDITIONAL COST TO THE OWNER. THE CONTRACTOR SHALL PROVIDE CONTINUOUS, 24-HOUR, LABOR, EQUIPMENT, MATERIAL, AND ACCESSORIES UNTIL SUCH TIME THAT ANY AFFECTED EQUIPMENT OPERATES AS PREVIOUSLY OPERATED, AT NO ADDITIONAL COST TO THE OWNER AND TO THE OWNER'S SATISFACTION.

3. ALL EQUIPMENT DEPICTED ON THIS DRAWING IS EXISTING. CROSSHATCHED LINEWORK DENOTES EQUIPMENT TO BE DEMOLITIONED UNLESS OTHERWISE NOTED AND SHALL BE REMOVED IN ACCORDANCE WITH THE RECOMMENDED CONSTRUCTION SEQUENCE ON DRAWING NO. E-SP-001. ALL DEMOLITION ACTIVITIES SHALL ALSO BE FULLY COORDINATED WITH MECHANICAL DEMOLITION ACTIVITIES. ALL DEMOLISHED ITEMS SHALL REMAIN THE PROPERTY OF THE OWNER. RELOCATE ALL DEMOLISHED ITEMS TO LOCATION(S) SPECIFIED BY THE OWNER AT NO ADDITIONAL COST TO THE OWNER.

4. EQUIPMENT/CONDUIT TAGS/NAMES HAVE BEEN ARBITRARILY ASSIGNED TO AID IN THE DRAWINGS. SOME EXISTING TAGS/NAMES HAVE BEEN USED WHERE POSSIBLE. CONTRACTOR SHALL MAKE EXTENSIVE VERIFICATION OF EXISTING EQUIPMENT PRIOR TO COMMENCING FULL SCALE DEMOLITION/RENOVATION ACTIVITIES.

5. TYPICAL EXISTING PUMPING UNIT CONTROL LOGIC SHOWN HERE. THIS EXISTING CONTROL LOGIC IS TYPICAL FOR PUMPS "P-4", "P-5", AND "P-6"

REFERENCE DRAWINGS.

E-SP-001 – CONSTRUCTION SEQUENCE

E-OL-004 – E-OL-005 – ONE-LINE DIAGRAM

E-CWS-014 – TYPICAL VALVE CONTROL SCHEMATIC

E-CWS-016 – E-CWS-017 – GENERAL CONTROL SCHEMATIC

BAR IS 2" ON ORIGINAL DRAWING. RESIZE THE INCH ADJUST SCALE ACCORDINGLY

STATE OF TEXAS REGISTERED PROFESSIONAL ENGINEER 2/21/2005

HARUTUNIAN ENGINEERING INCORPORATED

ENGINEERING AND ENVIRONMENTAL CONSULTANTS
305 EAST HUNTLAND DRIVE SUITE 500
AUSTIN, TEXAS 78752

REUSE OF DOCUMENTS
This document and the ideas and designs incorporated herein as an instrument of professional service has been developed, designed and prepared by Harutunian Engineering, Inc and is not to be used, in whole or part, for any other project without the written authorization of Water District No. 10 and Harutunian Engineering, Inc. © 2001

DESIGNED BY HEI
DRAWN BY HEI
REVIEWED BY HEI
SUBMITTED ON FEBRUARY 2005
SCALE NONE

TRAVIS COUNTY WATER CONTROL & IMPROVEMENT DISTRICT NO 10
PUMP STATION NO. 1

TYPICAL PUMPING UNIT "P-4", "P-5", AND "P-6"
CONTROL SCHEMATIC – DEMOLITION
(SHEET 3 OF 3)

PROJ. NO 2002-210 | SHEET 65 | DWG NO E-CWS-013

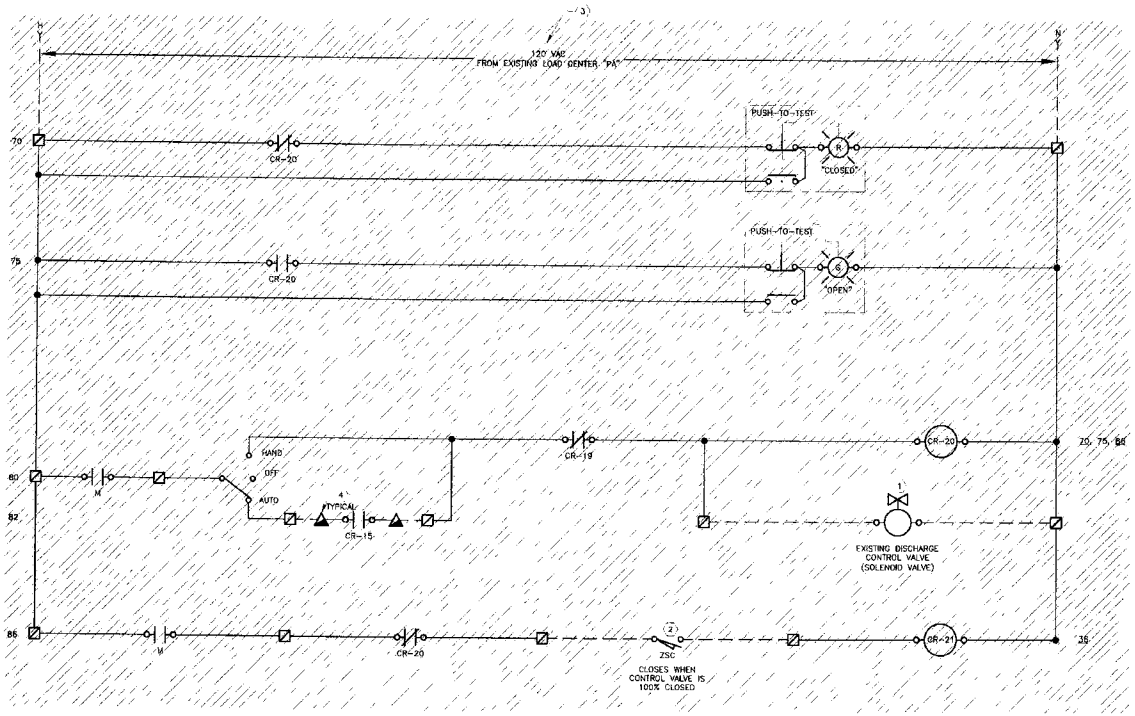

KEY NOTES:

1. DISCONNECT AND REMOVE EXISTING CONDUIT AND WIRING FROM EXISTING CONTROL VALVE. EXISTING SOLENOID CONTROL VALVE SHALL REMAIN AND BE REUSED DURING RENOVATION ACTIVITIES.
2. DISCONNECT AND REMOVE EXISTING CONDUIT AND WIRING FROM EXISTING POSITION SWITCH. EXISTING POSITION SWITCH SHALL REMAIN AND BE REUSED DURING RENOVATION ACTIVITIES.
3. DISCONNECT AND REMOVE EXISTING AUXILIARY POWER WIRING BETWEEN EXISTING MINI-LOAD CENTER PANELBOARD "PA" AND EXISTING MOTOR CONTROL CENTER. REFER TO DEMOLITION PUMP STATION FLOOR PLAN DRAWING FOR ADDITIONAL INFORMATION.
4. DISCONNECT AND REMOVE EXISTING WIRE CONNECTED TO EXISTING TERMINAL BLOCK LOCATED IN EXISTING TONE TELEMETRY CABINET. EXISTING TERMINAL BLOCK SHALL REMAIN.

WIRING AND TERMINAL DEVICE LEGEND:

- — — INDICATES WIRING BETWEEN PANELS OR TO A FIELD MOUNTED DEVICE.
- o DEVICE WIRING TERMINAL
- ☐ EXISTING TERMINAL BLOCK LOCATED IN EXISTING 480V MOTOR CONTROL CENTER (MCC). ANY DEVICE SHOWN WITH DEVICE WIRING TERMINALS CONNECTED DIRECTLY TO THESE SYMBOLS WITH SOLID LINES IS ALSO LOCATED IN EXISTING 480V MCC.
- ▲ EXISTING TERMINAL BLOCK LOCATED IN EXISTING TONE TELEMETRY CABINET. ANY DEVICE SHOWN WITH DEVICE TERMINALS CONNECTED DIRECTLY TO THESE SYMBOLS WITH SOLID LINES IS LOCATED IN OR ON THE EQUIPMENT.

GENERAL NOTES:

1. AN ATTEMPT IS MADE TO SHOW ALL EXISTING EQUIPMENT ON THIS ELECTRICAL CONTROL SCHEMATIC. REGARDLESS, THE CONTRACTOR IS RESPONSIBLE FOR VERIFYING THE APPLICABLE CONDUIT/WIRING FOR ELECTRICAL CONTROLS TO EXISTING EQUIPMENT WHETHER SHOWN HERE OR NOT. THE INFORMATION SHOWN HEREIN SHALL NOT RELIEVE THE CONTRACTOR THE RESPONSIBILITY OF CONFIRMING OR FINDING THE MOTOR CONTROL CENTER/CIRCUIT NUMBER/PANELBOARD/ETC., SERVING THE EXISTING LOAD. THE CONTRACTOR SHALL EXERCISE EVERY PRECAUTION TO ELIMINATE HAZARDS IN DISCONNECTING ANY DEVICE FROM AN ELECTRICAL CIRCUIT. THE CONTRACTOR MUST EXERCISE EXTREME CARE AS THERE ARE NO AVAILABLE AS BUILT RECORDS IDENTIFYING THE ROUTING OF ALL CONDUIT/WIRING BETWEEN THE VARIOUS MOTOR CONTROL CENTERS, CONTROL PANELS, LIGHTING PANELS, LOADS, ETC., AND THEIR COORDINATION WITH THE EXISTING ELECTRICAL SYSTEM. THEREFORE, THE CONTRACTOR IS TO EXERCISE EXTREME CARE, VERIFY THE ROUTING OF EXISTING CONDUIT/WIRING PRIOR TO COMMENCING FULL SCALE DEMOLITION OR RENOVATION ACTIVITIES. FOLLOWING THE DISCOVERY VERIFICATION OF THE EXISTING FIELD CONDITIONS, SHOULD ADJUSTMENTS BECOME A NECESSITY TO THE EXISTING OR PROPOSED SYSTEM (AS APPLICABLE), THE EXISTING DISCOVERED FIELD CONDITIONS MUST BE BROUGHT TO THE ENGINEER'S ATTENTION FOR EXECUTION OF THE NECESSARY ADJUSTMENTS/MODIFICATIONS.
2. THE CONTRACTOR SHALL BE AWARE THAT WHEN ANY EXISTING EQUIPMENT IS DISCONNECTED, REMOVED, RELOCATED OR OTHERWISE MODIFIED, THE POSSIBILITY MAY EXIST FOR SUCH ACTION TO LEAD TO INTERRUPTION OF OPERATION OF THE PUMP STATION. IF EXTREME CARE, VERIFICATION AND VALIDATION IS NOT CAREFULLY EXERCISED PRIOR TO COMMENCEMENT OF SUCH DEMOLITION ACTIVITY THE CONTRACTOR SHALL KNOW THAT ANY UNSCHEDULED INTERRUPTION TO THE CONTINUITY OF PUMP STATION OPERATION AT ITS EXPECTED PUMPING CAPACITY IS UNACCEPTABLE DURING THE CONSTRUCTION COURSE OF THIS PROJECT. HOWEVER, SHOULD ANY INTERRUPTION TO PUMP STATION OPERATION OCCUR FOR ANY UNFORESEEN REASON, WHETHER TOTALLY ACCIDENTAL OR DUE TO IMPROPER FIELD INVESTIGATION AND IMPROPER PLANNING PRIOR TO COMMENCEMENT OF THE ELECTRICAL/INSTRUMENTATION DEMOLITION EFFORT, THE RESPONSIBLE CONTRACTOR SHALL DETERMINE THE PROBLEM, CORRECT IT AND START UP THE INTERRUPTED EQUIPMENT WITHIN A CERTAIN TIME PERIOD AS DETERMINED BY THE OWNER AT NO ADDITIONAL COST TO THE OWNER. THE CONTRACTOR SHALL PROVIDE CONTINUOUS, 24-HOUR, LABOR, EQUIPMENT, MATERIAL, AND ACCESSORIES UNTIL SUCH TIME THAT ANY AFFECTED EQUIPMENT OPERATES AS PREVIOUSLY OPERATED, AT NO ADDITIONAL COST TO THE OWNER AND TO THE OWNER'S SATISFACTION.
3. ALL EQUIPMENT DEPICTED ON THIS DRAWING IS EXISTING. CROSSHATCHED LINEWORK DENOTES EQUIPMENT TO BE DEMOLITIONED UNLESS OTHERWISE NOTED AND SHALL BE REMOVED IN ACCORDANCE WITH THE RECOMMENDED CONSTRUCTION SEQUENCE ON DRAWING NO. E-SP-001. ALL DEMOLITION ACTIVITIES SHALL ALSO BE FULLY COORDINATED WITH MECHANICAL DEMOLITION ACTIVITIES. ALL DEMOLISHED ITEMS SHALL REMAIN THE PROPERTY OF THE OWNER. RELOCATE ALL DEMOLISHED ITEMS TO LOCATION(S) SPECIFIED BY THE OWNER AT NO ADDITIONAL COST TO THE OWNER.
4. EQUIPMENT/CONDUIT TAGS/NAMES HAVE BEEN ARBITRARILY ASSIGNED TO AID IN THE DRAWINGS. SOME EXISTING TAGS/NAMES HAVE BEEN USED WHERE POSSIBLE. CONTRACTOR SHALL MAKE EXTENSIVE VERIFICATION OF EXISTING EQUIPMENT PRIOR TO COMMENCING FULL SCALE DEMOLITION/RENOVATION ACTIVITIES.
5. TYPICAL EXISTING CONTROL VALVE CONTROL LOGIC SHOWN HERE. THIS EXISTING CONTROL LOGIC IS TYPICAL FOR CONTROL VALVES "CV-4", "CV-5", AND "CV-6"

REFERENCE DRAWINGS:

E-SP-001 – CONSTRUCTION SEQUENCE

E-OL-004 – E-OL-005 – ONE-LINE DIAGRAM

E-CWS-011 – E-CWS-013 – TYPICAL PUMP CONTROL LOGIC

E-CWS-017 – GENERAL CONTROL SCHEMATIC

BAR IS 1" ON ORIGINAL DRAWING. FOR ALL OTHER SIZES ADJUST SCALE AS APPROPRIATE

STATE OF TEXAS — REGISTERED PROFESSIONAL ENGINEER — 2/21/2005

HARUTUNIAN ENGINEERING INCORPORATED
ENGINEERING AND ENVIRONMENTAL CONSULTANTS
305 EAST HUNTLAND DRIVE SUITE 500
AUSTIN, TEXAS 78752

REUSE OF DOCUMENTS
This document and the ideas and designs incorporated herein as an instrument of professional service has been developed, designed and prepared by Harutunian Engineering, Inc. and is not to be used, in whole or part, for any other project without the written authorization of Water District No. 10 and Harutunian Engineering, Inc. © 2005

DRAWN BY	HEI
CHECKED BY	HEI
REVIEWED BY	HEI
REVISION DATE	FEBRUARY 2005
SCALE	NONE

TRAVIS COUNTY WATER CONTROL & IMPROVEMENT DISTRICT NO. 10
PUMP STATION NO. 1

TYPICAL CONTROL VALVE "CV-4", "CV-5", AND "CV-6"
CONTROL SCHEMATIC – DEMOLITION

PROJECT NO.	SHEET	DRAWING NO.
2002-210	66	E-CWS-014

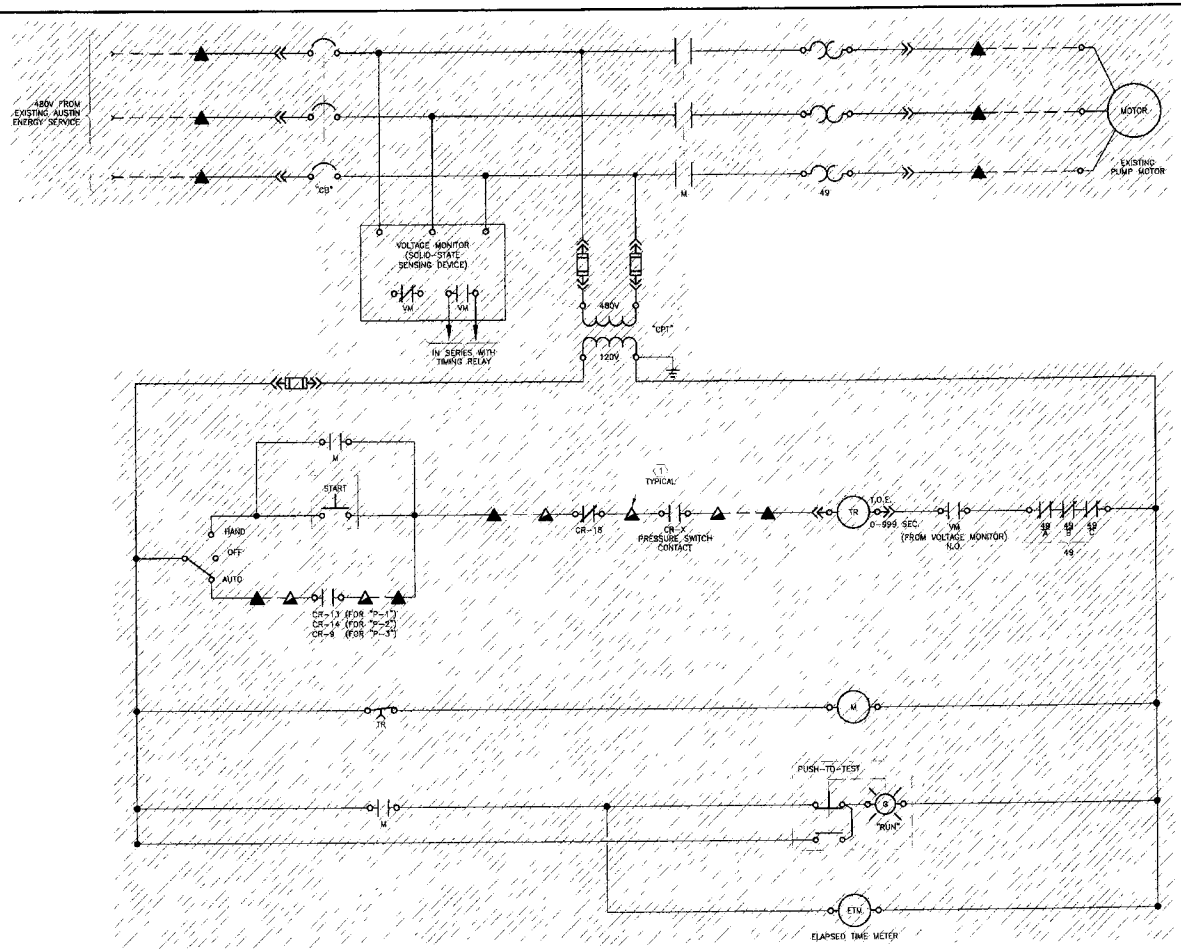

KEY NOTES:

(1) DISCONNECT AND REMOVE EXISTING WIRE CONNECTED TO EXISTING TERMINAL BLOCK LOCATED IN EXISTING TONE TELEMETRY CABINET. EXISTING TERMINAL BLOCK SHALL REMAIN.

WIRING AND TERMINAL DEVICE LEGEND:

— — INDICATES WIRING BETWEEN PANELS OR TO A FIELD MOUNTED DEVICE.

o DEVICE WIRING TERMINAL

▲ EXISTING TERMINAL BLOCK LOCATED IN EXISTING FIELD MOUNTED COMBINATION MOTOR STARTER ENCLOSURE. ANY DEVICE SHOWN WITH DEVICE WIRING TERMINALS CONNECTED DIRECTLY TO THESE SYMBOLS WITH SOLID LINES IS ALSO LOCATED IN THE EXISTING COMBINATION MOTOR STARTER ENCLOSURE.

▲ EXISTING TERMINAL BLOCK LOCATED IN EXISTING TONE TELEMETRY CABINET. ANY DEVICE SHOWN WITH DEVICE TERMINALS CONNECTED DIRECTLY TO THESE SYMBOLS WITH SOLID LINES IS LOCATED IN OR ON THE EQUIPMENT

GENERAL NOTES:

1. AN ATTEMPT IS MADE TO SHOW ALL EXISTING EQUIPMENT ON THIS ELECTRICAL CONTROL SCHEMATIC. REGARDLESS, THE CONTRACTOR IS RESPONSIBLE FOR VERIFYING THE APPLICABLE CONDUIT/WIRING FOR ELECTRICAL CONTROLS TO EXISTING EQUIPMENT WHETHER SHOWN HERE OR NOT. THE INFORMATION SHOWN HEREIN SHALL NOT RELIEVE THE CONTRACTOR THE RESPONSIBILITY OF CONFIRMING OR FINDING THE MOTOR CONTROL CENTER/CIRCUIT NUMBER/PANELBOARD/ETC., SERVING THE EXISTING LOAD. THE CONTRACTOR SHALL EXERCISE EVERY PRECAUTION TO ELIMINATE HAZARDS IN DISCONNECTING ANY DEVICE FROM AN ELECTRICAL CIRCUIT. THE CONTRACTOR MUST EXERCISE EXTREME CARE AS THERE ARE NO AVAILABLE AS BUILT RECORDS IDENTIFYING THE ROUTING OF ALL CONDUIT/WIRING BETWEEN THE VARIOUS MOTOR CONTROL CENTERS, CONTROL PANELS, LIGHTING PANELS, LOADS, ETC., AND THEIR COORDINATION WITH THE EXISTING ELECTRICAL SYSTEM. THEREFORE, THE CONTRACTOR IS TO EXERCISE EXTREME CARE, VERIFY THE ROUTING OF EXISTING CONDUIT/WIRING PRIOR TO COMMENCING FULL SCALE DEMOLITION OR RENOVATION ACTIVITIES. FOLLOWING THE DISCOVERY VERIFICATION OF THE EXISTING FIELD CONDITIONS, SHOULD ADJUSTMENTS BECOME A NECESSITY TO THE EXISTING OR PROPOSED SYSTEM (AS APPLICABLE), THE EXISTING DISCOVERED FIELD CONDITIONS MUST BE BROUGHT TO THE ENGINEER'S ATTENTION FOR EXECUTION OF THE NECESSARY ADJUSTMENTS/MODIFICATIONS.
2. THE CONTRACTOR SHALL BE AWARE THAT WHEN ANY EXISTING EQUIPMENT IS DISCONNECTED, REMOVED, RELOCATED OR OTHERWISE MODIFIED, THE POSSIBILITY MAY EXIST FOR SUCH ACTION TO LEAD TO INTERRUPTION OF OPERATION OF THE PUMP STATION. IF EXTREME CARE, VERIFICATION, AND VALIDATION IS NOT CAREFULLY EXERCISED PRIOR TO COMMENCEMENT OF SUCH DEMOLITION ACTIVITY. THE CONTRACTOR SHALL KNOW THAT ANY UNSCHEDULED INTERRUPTION TO THE CONTINUITY OF PUMP STATION OPERATION AT ITS EXPECTED PUMPING CAPACITY IS UNACCEPTABLE DURING THE CONSTRUCTION COURSE OF THIS PROJECT. HOWEVER, SHOULD ANY INTERRUPTION TO PUMP STATION OPERATION OCCUR FOR ANY UNFORESEEN REASON, WHETHER TOTALLY ACCIDENTAL OR DUE TO IMPROPER FIELD INVESTIGATION AND IMPROPER PLANNING PRIOR TO COMMENCEMENT OF THE ELECTRICAL/INSTRUMENTATION DEMOLITION EFFORT, THE RESPONSIBLE CONTRACTOR SHALL DETERMINE THE PROBLEM, CORRECT IT, AND START UP THE INTERRUPTED EQUIPMENT WITHIN A CERTAIN TIME PERIOD AS DETERMINED BY THE OWNER AT NO ADDITIONAL COST TO THE OWNER. THE CONTRACTOR SHALL PROVIDE CONTINUOUS, 24-HOUR, LABOR, EQUIPMENT, MATERIAL, AND ACCESSORIES UNTIL SUCH TIME THAT ANY AFFECTED EQUIPMENT OPERATES AS PREVIOUSLY OPERATED, AT NO ADDITIONAL COST TO THE OWNER AND TO THE OWNER'S SATISFACTION.
3. ALL EQUIPMENT DEPICTED ON THIS DRAWING IS EXISTING. CROSSHATCHED LINEWORK DENOTES EQUIPMENT TO BE DEMOLITIONED UNLESS OTHERWISE NOTED AND SHALL BE REMOVED IN ACCORDANCE WITH THE RECOMMENDED CONSTRUCTION SEQUENCE ON DRAWING NO. E-SP-001. ALL DEMOLITION ACTIVITIES SHALL ALSO BE FULLY COORDINATED WITH MECHANICAL DEMOLITION ACTIVITIES. ALL DEMOLISHED ITEMS SHALL REMAIN THE PROPERTY OF THE OWNER. RELOCATE ALL DEMOLISHED ITEMS TO LOCATION(S) SPECIFIED BY THE OWNER AT NO ADDITIONAL COST TO THE OWNER.
4. EQUIPMENT/CONDUIT TAGS/NAMES HAVE BEEN ARBITRARILY ASSIGNED TO AID IN THE DRAWINGS. SOME EXISTING TAGS/NAMES HAVE BEEN USED WHERE POSSIBLE. CONTRACTOR SHALL MAKE EXTENSIVE VERIFICATION OF EXISTING EQUIPMENT PRIOR TO COMMENCING FULL SCALE DEMOLITION/RENOVATION ACTIVITIES.
5. TYPICAL EXISTING PUMPING UNIT CONTROL LOGIC SHOWN HERE. THIS EXISTING CONTROL LOGIC IS TYPICAL FOR PUMPS "P-1", "P-2" AND "P-3"

REFERENCE DRAWINGS:

E-SP-001 – CONSTRUCTION SEQUENCE

E-DL-006 – ONE-LINE DIAGRAM

E-CWS-016 – E-CWS-017 – GENERAL CONTROL SCHEMATIC

BAR LENGTH ON ORIGINAL DRAWING IS 1 INCH. ADJUST SCALE ACCORDINGLY

STATE OF TEXAS — REGISTERED — 2/21/2005

HARUTUNIAN ENGINEERING INCORPORATED

ENGINEERING AND ENVIRONMENTAL CONSULTANTS
305 EAST HUNTLAND DRIVE SUITE 500
AUSTIN, TEXAS 78752

REUSE OF DOCUMENTS
This document and the ideas and designs incorporated herein as an instrument of professional service last been developed, designed and prepared by Harutunian Engineering, Inc. and is not to be used, in whole or part, for any other project without the written authorization of Water District No. 10 and Harutunian Engineering, Inc. © 2005

DESIGNED BY HEI
DRAWN BY HEI
REVIEWED BY HEI
DATE FEBRUARY 2005
SCALE NONE

TRAVIS COUNTY WATER CONTROL & IMPROVEMENT DISTRICT NO 10
PUMP STATION NO. 1

TYPICAL PUMPING UNIT "P-1", "P-2", AND "P-3"
CONTROL SCHEMATIC – DEMOLITION

C.I.P. NO. 2002-210 | SHEET 67 | DWG. E-CWS-015

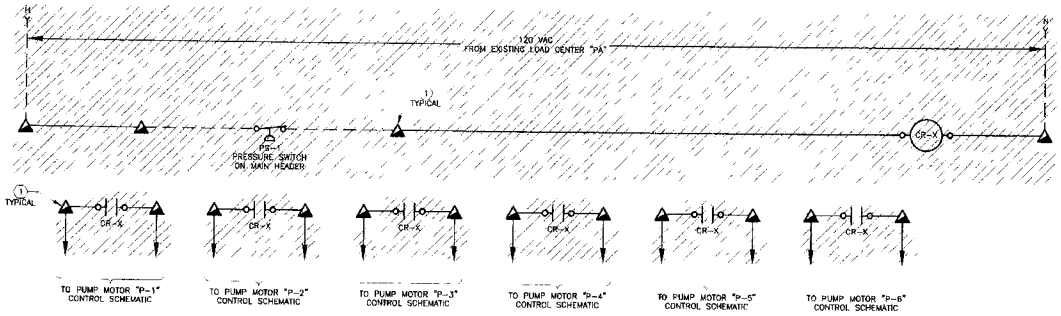

PRESSURE SWITCH CONTROL SCHEMATIC – EXISTING

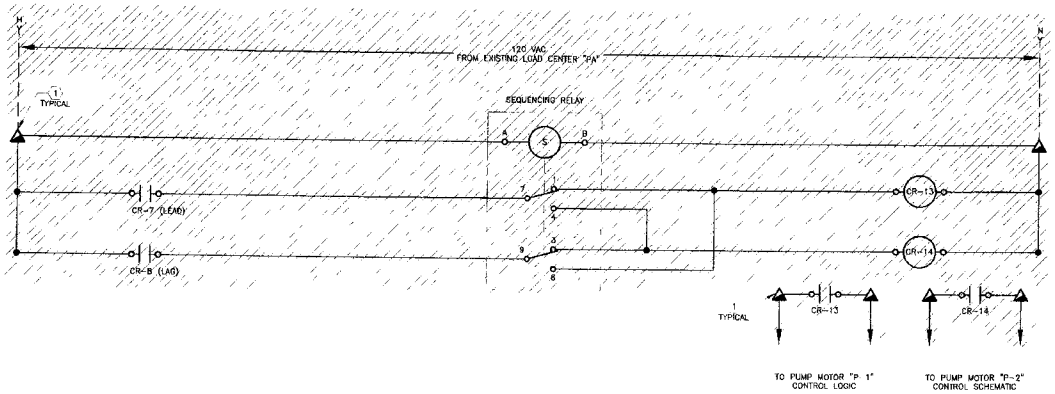

TWO PUMP "P-1" AND "P-2" ALTERNATOR CONTROL SCHEMATIC – EXISTING

KEY NOTES:

(1) DISCONNECT AND REMOVE EXISTING WIRE CONNECTED TO EXISTING TERMINAL BLOCK LOCATED IN EXISTING TONE TELEMETRY CABINET EXISTING TERMINAL BLOCK SHALL REMAIN.

WIRING AND TERMINAL DEVICE LEGEND:

— — INDICATES WIRING BETWEEN PANELS OR TO A FIELD MOUNTED DEVICE

O DEVICE WIRING TERMINAL

▲ EXISTING TERMINAL BLOCK LOCATED IN EXISTING TONE TELEMETRY CABINET. ANY DEVICE SHOWN WITH DEVICE TERMINALS CONNECTED DIRECTLY TO THESE SYMBOLS WITH SOLID LINES IS LOCATED IN OR ON THE EQUIPMENT

GENERAL NOTES.

1. AN ATTEMPT IS MADE TO SHOW ALL EXISTING EQUIPMENT ON THIS ELECTRICAL CONTROL SCHEMATIC. REGARDLESS, THE CONTRACTOR IS RESPONSIBLE FOR VERIFYING THE APPLICABLE CONDUIT/WIRING FOR ELECTRICAL CONTROLS TO EXISTING EQUIPMENT WHETHER SHOWN HERE OR NOT. THE INFORMATION SHOWN HEREIN SHALL NOT RELIEVE THE CONTRACTOR THE RESPONSIBILITY OF CONFIRMING OR FINDING THE MOTOR CONTROL CENTER/CIRCUIT NUMBER/PANELBOARD/ETC., SERVING THE EXISTING LOAD. THE CONTRACTOR SHALL EXERCISE EVERY PRECAUTION TO ELIMINATE HAZARDS IN DISCONNECTING ANY DEVICE FROM AN ELECTRICAL CIRCUIT. THE CONTRACTOR MUST EXERCISE EXTREME CARE AS THERE ARE NO AVAILABLE AS BUILT RECORDS IDENTIFYING THE ROUTING OF ALL CONDUIT/WIRING BETWEEN THE VARIOUS MOTOR CONTROL CENTERS, CONTROL PANELS, LIGHTING PANELS, LOADS, ETC., AND THEIR COORDINATION WITH THE EXISTING ELECTRICAL SYSTEM. THEREFORE, THE CONTRACTOR IS TO EXERCISE EXTREME CARE, VERIFY THE ROUTING OF EXISTING CONDUIT/WIRING PRIOR TO COMMENCING FULL SCALE DEMOLITION OR RENOVATION ACTIVITIES. FOLLOWING THE DISCOVERY VERIFICATION OF THE EXISTING FIELD CONDITIONS, SHOULD ADJUSTMENTS BECOME A NECESSITY TO THE EXISTING OR PROPOSED SYSTEM (AS APPLICABLE), THE EXISTING DISCOVERED FIELD CONDITIONS MUST BE BROUGHT TO THE ENGINEER'S ATTENTION FOR EXECUTION OF THE NECESSARY ADJUSTMENTS/MODIFICATIONS.

2. THE CONTRACTOR SHALL BE AWARE THAT WHEN ANY EXISTING EQUIPMENT IS DISCONNECTED, REMOVED, RELOCATED OR OTHERWISE MODIFIED, THE POSSIBILITY MAY EXIST FOR SUCH ACTION TO LEAD TO INTERRUPTION OF OPERATION OF THE PUMP STATION. IF EXTREME CARE, VERIFICATION, AND VALIDATION IS NOT CAREFULLY EXERCISED PRIOR TO COMMENCEMENT OF SUCH DEMOLITION ACTIVITY THE CONTRACTOR SHALL KNOW THAT ANY UNSCHEDULED INTERRUPTION TO THE CONTINUITY OF PUMP STATION OPERATION AT ITS EXPECTED PUMPING CAPACITY IS UNACCEPTABLE DURING THE CONSTRUCTION COURSE OF THIS PROJECT. HOWEVER, SHOULD ANY INTERRUPTION TO PUMP STATION OPERATION OCCUR FOR ANY UNFORESEEN REASON, WHETHER TOTALLY ACCIDENTAL OR DUE TO IMPROPER FIELD INVESTIGATION AND IMPROPER PLANNING PRIOR TO COMMENCEMENT OF THE ELECTRICAL/INSTRUMENTATION DEMOLITION EFFORT, THE RESPONSIBLE CONTRACTOR SHALL DETERMINE THE PROBLEM, CORRECT IT, AND START UP THE INTERRUPTED EQUIPMENT WITHIN A CERTAIN TIME PERIOD AS DETERMINED BY THE OWNER AT NO ADDITIONAL COST TO THE OWNER. THE CONTRACTOR SHALL PROVIDE CONTINUOUS, 24-HOUR, LABOR, EQUIPMENT, MATERIAL, AND ACCESSORIES UNTIL SUCH TIME THAT ANY AFFECTED EQUIPMENT OPERATES AS PREVIOUSLY OPERATED, AT NO ADDITIONAL COST TO THE OWNER AND TO THE OWNER'S SATISFACTION.

3. ALL EQUIPMENT DEPICTED ON THIS DRAWING IS EXISTING. CROSSHATCHED LINEWORK DENOTES EQUIPMENT TO BE DEMOLITIONED UNLESS OTHERWISE NOTED AND SHALL BE REMOVED IN ACCORDANCE WITH THE RECOMMENDED CONSTRUCTION SEQUENCE ON DRAWING NO. E-SP-001 ALL DEMOLITION ACTIVITIES SHALL ALSO BE FULLY COORDINATED WITH MECHANICAL DEMOLITION ACTIVITIES. ALL DEMOLISHED ITEMS SHALL REMAIN THE PROPERTY OF THE OWNER. RELOCATE ALL DEMOLISHED ITEMS TO LOCATION(S) SPECIFIED BY THE OWNER AT NO ADDITIONAL COST TO THE OWNER.

4. EQUIPMENT/CONDUIT TAGS/NAMES HAVE BEEN ARBITRARILY ASSIGNED TO AID IN THE DRAWINGS. SOME EXISTING TAGS/NAMES HAVE BEEN USED WHERE POSSIBLE. CONTRACTOR SHALL MAKE EXTENSIVE VERIFICATION OF EXISTING EQUIPMENT PRIOR TO COMMENCING FULL SCALE DEMOLITION/RENOVATION ACTIVITIES.

REFERENCE DRAWINGS.

E-CWS-011 – E-CWS-013 – TYPICAL PUMP (P4–P6) CONTROL SCHEMATIC

E-CWS-015 – TYPICAL PUMP (P1–P3) CONTROL SCHEMATIC

E-SP-001 – CONSTRUCTION SEQUENCE

DARK LINES ON ORIGINAL DRAWING EQUAL 1/4 FULL ADJUST SCALE ACCORDINGLY

STATE OF TEXAS
K. A. HARUTUNIAN
REGISTERED
PROFESSIONAL ENGINEER
2/21/2005

HARUTUNIAN ENGINEERING INCORPORATED
ENGINEERING AND ENVIRONMENTAL CONSULTANTS
305 EAST HUNTLAND DRIVE SUITE 500
AUSTIN, TEXAS 78752

REUSE OF DOCUMENTS
This document and the ideas and designs incorporated herein as an instrument of professional service has been developed, designed and prepared by Harutunian Engineering, Inc. and is not to be used, in whole or part, for any other project without the written authorization of Water District No. 10 and Harutunian Engineering, Inc. © 2005

DESIGNED	HEI
DRAWN	HEI
REVIEWED	HEI
DATE	FEBRUARY 2005
SCALE	NONE

TRAVIS COUNTY WATER CONTROL & IMPROVEMENT DISTRICT NO 10
PUMP STATION NO. 1

GENERAL CONTROL SCHEMATICS – DEMOLITION
(SHEET 1 OF 2)

PROJECT No.	SHEET	DWG.
2002-210	68	E-CWS-016

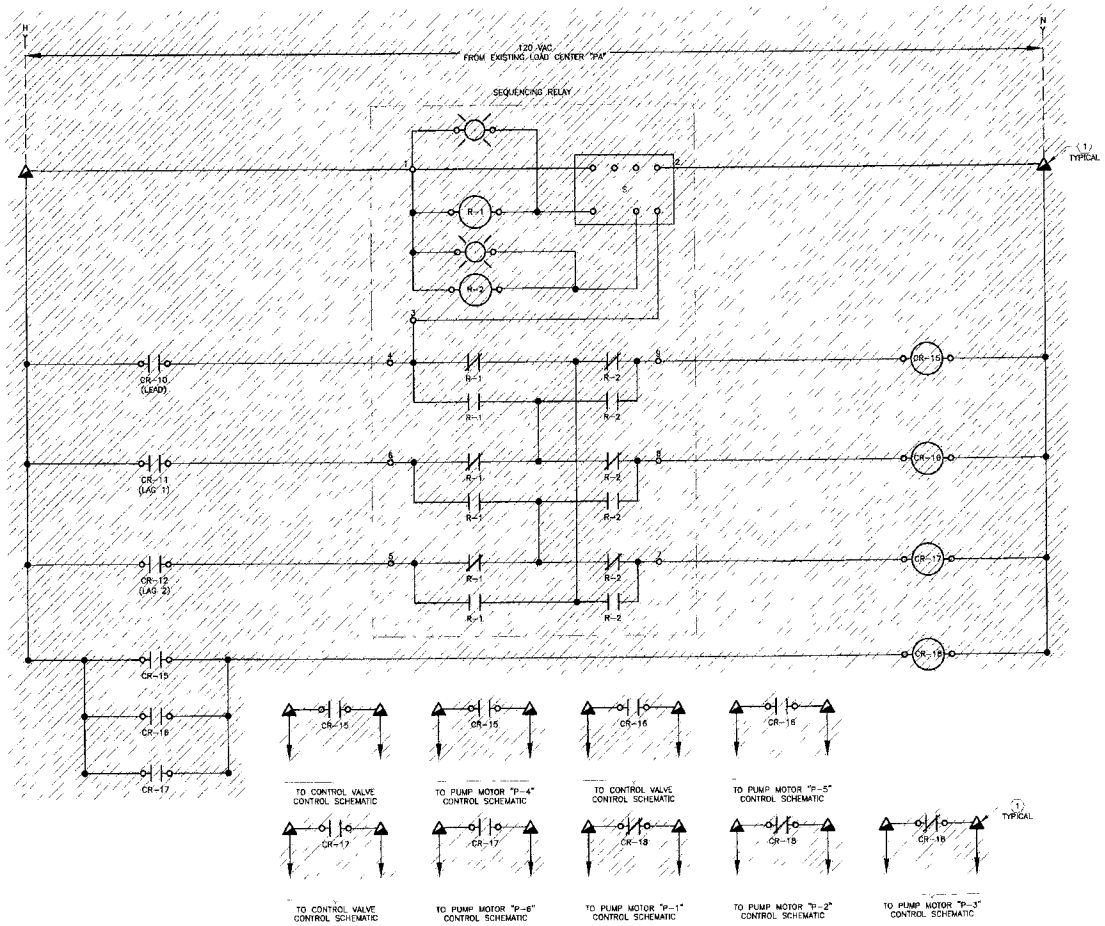

THREE PUMP "P-4", "P-5" AND "P-6" ALTERNATOR CONTROL SCHEMATIC – EXISTING

KEY NOTES:

(1) DISCONNECT AND REMOVE EXISTING WIRE CONNECTED TO EXISTING TERMINAL BLOCK LOCATED IN EXISTING TONE TELEMETRY CABINET EXISTING TERMINAL BLOCK SHALL REMAIN.

WIRING AND TERMINAL DEVICE LEGEND.

— — INDICATES WIRING BETWEEN PANELS OR TO A FIELD MOUNTED DEVICE.

o DEVICE WIRING TERMINAL

▲ EXISTING TERMINAL BLOCK LOCATED IN EXISTING TONE TELEMETRY CABINET. ANY DEVICE SHOWN WITH DEVICE TERMINALS CONNECTED DIRECTLY TO THESE SYMBOLS WITH SOLID LINES IS LOCATED IN OR ON THE EQUIPMENT

GENERAL NOTES:

1. AN ATTEMPT IS MADE TO SHOW ALL EXISTING EQUIPMENT ON THIS ELECTRICAL CONTROL SCHEMATIC. REGARDLESS, THE CONTRACTOR IS RESPONSIBLE FOR VERIFYING THE APPLICABLE CONDUIT/WIRING FOR ELECTRICAL CONTROLS TO EXISTING EQUIPMENT WHETHER SHOWN HERE OR NOT. THE INFORMATION SHOWN HEREIN SHALL NOT RELIEVE THE CONTRACTOR THE RESPONSIBILITY OF CONFIRMING OR FINDING THE MOTOR CONTROL CENTER/CIRCUIT NUMBER/PANELBOARD/ETC. SERVING THE EXISTING LOAD. THE CONTRACTOR SHALL EXERCISE EVERY PRECAUTION TO ELIMINATE HAZARDS IN DISCONNECTING ANY DEVICE FROM AN ELECTRICAL CIRCUIT. THE CONTRACTOR MUST EXERCISE EXTREME CARE AS THERE ARE NO AVAILABLE AS BUILT RECORDS IDENTIFYING THE ROUTING OF ALL CONDUIT/WIRING BETWEEN THE VARIOUS MOTOR CONTROL CENTERS, CONTROL PANELS, LIGHTING PANELS, LOADS, ETC., AND THEIR COORDINATION WITH THE EXISTING ELECTRICAL SYSTEM. THEREFORE, THE CONTRACTOR IS TO EXERCISE EXTREME CARE, VERIFY THE ROUTING OF EXISTING CONDUIT/WIRING PRIOR TO COMMENCING FULL SCALE DEMOLITION OR RENOVATION ACTIVITIES. FOLLOWING THE DISCOVERY VERIFICATION OF THE EXISTING FIELD CONDITIONS, SHOULD ADJUSTMENTS BECOME A NECESSITY TO THE EXISTING OR PROPOSED SYSTEM (AS APPLICABLE), THE EXISTING DISCOVERED FIELD CONDITIONS MUST BE BROUGHT TO THE ENGINEER'S ATTENTION FOR EXECUTION OF THE NECESSARY ADJUSTMENTS/MODIFICATIONS.
2. THE CONTRACTOR SHALL BE AWARE THAT WHEN ANY EXISTING EQUIPMENT IS DISCONNECTED, REMOVED, RELOCATED OR OTHERWISE MODIFIED, THE POSSIBILITY MAY EXIST FOR SUCH ACTION TO LEAD TO INTERRUPTION OF OPERATION OF THE PUMP STATION. IF EXTREME CARE, VERIFICATION, AND VALIDATION IS NOT CAREFULLY EXERCISED PRIOR TO COMMENCEMENT OF SUCH DEMOLITION ACTIVITY THE CONTRACTOR SHALL KNOW THAT ANY UNSCHEDULED INTERRUPTION TO THE CONTINUITY OF PUMP STATION OPERATION AT ITS EXPECTED PUMPING CAPACITY IS UNACCEPTABLE DURING THE CONSTRUCTION COURSE OF THIS PROJECT. HOWEVER, SHOULD ANY INTERRUPTION TO PUMP STATION OPERATION OCCUR FOR ANY UNFORESEEN REASON, WHETHER TOTALLY ACCIDENTAL OR DUE TO IMPROPER FIELD INVESTIGATION AND IMPROPER PLANNING PRIOR TO COMMENCEMENT OF THE ELECTRICAL/INSTRUMENTATION DEMOLITION EFFORT, THE RESPONSIBLE CONTRACTOR SHALL DETERMINE THE PROBLEM, CORRECT IT, AND START UP THE INTERRUPTED EQUIPMENT WITHIN A CERTAIN TIME PERIOD AS DETERMINED BY THE OWNER AT NO ADDITIONAL COST TO THE OWNER. THE CONTRACTOR SHALL PROVIDE CONTINUOUS, 24-HOUR, LABOR, EQUIPMENT, MATERIAL, AND ACCESSORIES UNTIL SUCH TIME THAT ANY AFFECTED EQUIPMENT OPERATES AS PREVIOUSLY OPERATED, AT NO ADDITIONAL COST TO THE OWNER AND TO THE OWNER'S SATISFACTION.
3. ALL EQUIPMENT DEPICTED ON THIS DRAWING IS EXISTING. CROSSHATCHED LINEWORK DENOTES EQUIPMENT TO BE DEMOLITIONED UNLESS OTHERWISE NOTED AND SHALL BE REMOVED IN ACCORDANCE WITH THE RECOMMENDED CONSTRUCTION SEQUENCE ON DRAWING NO. E-SP-001 ALL DEMOLITION ACTIVITIES SHALL ALSO BE FULLY COORDINATED WITH MECHANICAL DEMOLITION ACTIVITIES. ALL DEMOLISHED ITEMS SHALL REMAIN THE PROPERTY OF THE OWNER. RELOCATE ALL DEMOLISHED ITEMS TO LOCATION(S) SPECIFIED BY THE OWNER AT NO ADDITIONAL COST TO THE OWNER.
4. EQUIPMENT/CONDUIT TAGS/NAMES HAVE BEEN ARBITRARILY ASSIGNED TO AID IN THE DRAWINGS. SOME EXISTING TAGS/NAMES HAVE BEEN USED WHERE POSSIBLE. CONTRACTOR SHALL MAKE EXTENSIVE VERIFICATION OF EXISTING EQUIPMENT PRIOR TO COMMENCING FULL SCALE DEMOLITION/RENOVATION ACTIVITIES.

REFERENCE DRAWINGS.

E-CWS-011 – E-CWS-013 – TYPICAL PUMP (P4-P6) CONTROL SCHEMATIC

E-CWS-015 – TYPICAL PUMP (P1-P3) CONTROL SCHEMATIC

E-SP-001 – CONSTRUCTION SEQUENCE

BAR MUST ON ORIGINAL DRAWING FOR THIS SHEET TO BE ACCURATE AT A CORRECT SCALE

K. Harutunian
STATE OF TEXAS
KARL HARUTUNIAN
REGISTERED
2/21/2005

HARUTUNIAN ENGINEERING INCORPORATED
ENGINEERING AND ENVIRONMENTAL CONSULTANTS
305 EAST HUNTLAND DRIVE SUITE 500
AUSTIN, TEXAS 78752

REUSE OF DOCUMENTS
This document and the ideas and designs incorporated herein as an instrument of professional service has been developed, designed and prepared by Harutunian Engineering, Inc. and is not to be used, in whole or part, for any other project without the written authorization of Water District No. 10 and Harutunian Engineering, Inc. © 2005

DATE EVENT

DR. HEI
CK. HEI
APPR. HEI
SUBMITTAL DATE FEBRUARY 2005
SCALE NONE

TRAVIS COUNTY WATER CONTROL & IMPROVEMENT DISTRICT NO. 10
PUMP STATION NO. 1

GENERAL CONTROL SCHEMATICS – DEMOLITION
(SHEET 2 OF 2)

PROJECT # 2002-210 | SHEET 69 | DWG. NO. E-CWS-017

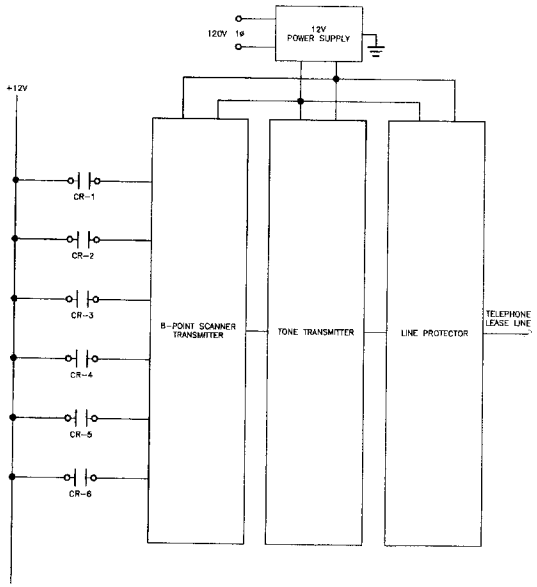

TONE TELEMETRY SYSTEM
LOCATED AT PUMP STATION NO. 2 – EXISTING

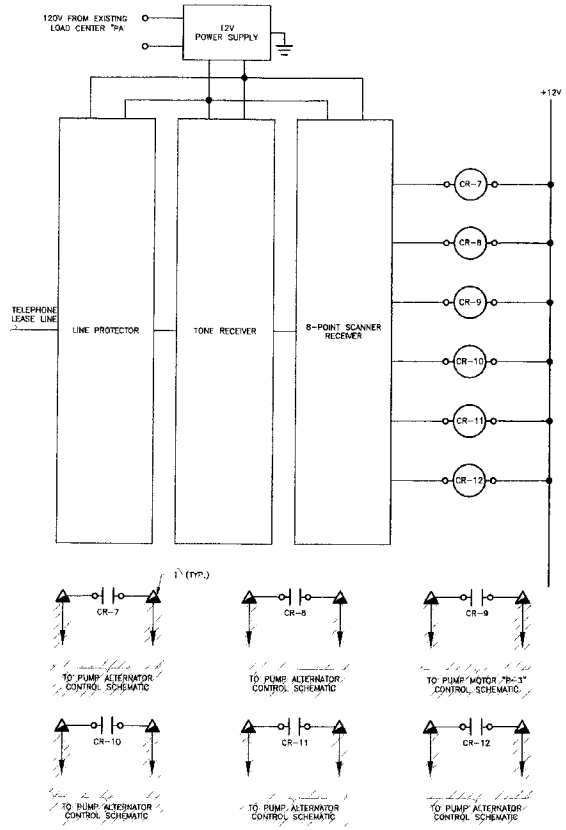

TONE TELEMETRY SYSTEM
LOCATED AT PUMP STATION NO. 1 – DEMOLITION

WIRING AND TERMINAL DEVICE LEGEND.

— — INDICATES WIRING BETWEEN PANELS OR TO A FIELD MOUNTED DEVICE.

o DEVICE WIRING TERMINAL

▲ EXISTING TERMINAL BLOCK LOCATED IN EXISTING TONE TELEMETRY CABINET. ANY DEVICE SHOWN WITH DEVICE TERMINALS CONNECTED DIRECTLY TO THESE SYMBOLS WITH SOLID LINES IS LOCATED IN OR ON THE EQUIPMENT

GENERAL NOTES.

1. AN ATTEMPT IS MADE TO SHOW ALL EXISTING EQUIPMENT ON THIS ELECTRICAL CONTROL SCHEMATIC. REGARDLESS, THE CONTRACTOR IS RESPONSIBLE FOR VERIFYING THE APPLICABLE CONDUIT/WIRING FOR ELECTRICAL CONTROLS TO EXISTING EQUIPMENT WHETHER SHOWN HERE OR NOT. THE INFORMATION SHOWN HEREIN SHALL NOT RELIEVE THE CONTRACTOR THE RESPONSIBILITY OF CONFIRMING OR FINDING THE MOTOR CONTROL CENTER/CIRCUIT NUMBER/PANELBOARD/ETC., SERVING THE EXISTING LOAD. THE CONTRACTOR SHALL EXERCISE EVERY PRECAUTION TO ELIMINATE HAZARDS IN DISCONNECTING ANY DEVICE FROM AN ELECTRICAL CIRCUIT. THE CONTRACTOR MUST EXERCISE EXTREME CARE AS THERE ARE NO AVAILABLE AS BUILT RECORDS IDENTIFYING THE ROUTING OF ALL CONDUIT/WIRING BETWEEN THE VARIOUS MOTOR CONTROL CENTERS, CONTROL PANELS, LIGHTING PANELS, LOADS, ETC., AND THEIR COORDINATION WITH THE EXISTING ELECTRICAL SYSTEM. THEREFORE, THE CONTRACTOR IS TO EXERCISE EXTREME CARE, VERIFY THE ROUTING OF EXISTING CONDUIT/WIRING PRIOR TO COMMENCING FULL SCALE DEMOLITION OR RENOVATION ACTIVITIES. FOLLOWING THE DISCOVERY VERIFICATION OF THE EXISTING FIELD CONDITIONS, SHOULD ADJUSTMENTS BECOME A NECESSITY TO THE EXISTING OR PROPOSED SYSTEM (AS APPLICABLE), THE EXISTING DISCOVERED FIELD CONDITIONS MUST BE BROUGHT TO THE ENGINEER'S ATTENTION FOR EXECUTION OF THE NECESSARY ADJUSTMENTS/MODIFICATIONS.
2. THE CONTRACTOR SHALL BE AWARE THAT WHEN ANY EXISTING EQUIPMENT IS DISCONNECTED, REMOVED, RELOCATED OR OTHERWISE MODIFIED, THE POSSIBILITY MAY EXIST FOR SUCH ACTION TO LEAD TO INTERRUPTION OF OPERATION OF THE PUMP STATION. IF EXTREME CARE, VERIFICATION, AND VALIDATION IS NOT CAREFULLY EXERCISED PRIOR TO COMMENCEMENT OF SUCH DEMOLITION ACTIVITY, THE CONTRACTOR SHALL KNOW THAT ANY UNSCHEDULED INTERRUPTION TO THE CONTINUITY OF PUMP STATION OPERATION AT ITS EXPECTED PUMPING CAPACITY IS UNACCEPTABLE DURING THE CONSTRUCTION COURSE OF THIS PROJECT. HOWEVER, SHOULD ANY INTERRUPTION TO PUMP STATION OPERATION OCCUR FOR ANY UNFORESEEN REASON, WHETHER TOTALLY ACCIDENTAL OR DUE TO IMPROPER FIELD INVESTIGATION AND IMPROPER PLANNING PRIOR TO COMMENCEMENT OF THE ELECTRICAL/INSTRUMENTATION DEMOLITION EFFORT, THE RESPONSIBLE CONTRACTOR SHALL DETERMINE THE PROBLEM, CORRECT IT, AND START UP THE INTERRUPTED EQUIPMENT WITHIN A CERTAIN TIME PERIOD AS DETERMINED BY THE OWNER AT NO ADDITIONAL COST TO THE OWNER. THE CONTRACTOR SHALL PROVIDE CONTINUOUS, 24–HOUR, LABOR, EQUIPMENT, MATERIAL, AND ACCESSORIES UNTIL SUCH TIME THAT ANY AFFECTED EQUIPMENT OPERATES AS PREVIOUSLY OPERATED, AT NO ADDITIONAL COST TO THE OWNER AND TO THE OWNER'S SATISFACTION.
3. ALL EQUIPMENT DEPICTED ON THIS DRAWING IS EXISTING. CROSSHATCHED LINEWORK DENOTES EQUIPMENT TO BE DEMOLITIONED UNLESS OTHERWISE NOTED AND SHALL BE REMOVED IN ACCORDANCE WITH THE RECOMMENDED CONSTRUCTION SEQUENCE ON DRAWING NO. E–SP–001. ALL DEMOLITION ACTIVITIES SHALL ALSO BE FULLY COORDINATED WITH MECHANICAL DEMOLITION ACTIVITIES. ALL DEMOLISHED ITEMS SHALL REMAIN THE PROPERTY OF THE OWNER. RELOCATE ALL DEMOLISHED ITEMS TO LOCATION(S) SPECIFIED BY THE OWNER AT NO ADDITIONAL COST TO THE OWNER.
4. EQUIPMENT/CONDUIT TAGS/NAMES HAVE BEEN ARBITRARILY ASSIGNED TO AID IN THE DRAWINGS. SOME EXISTING TAGS/NAMES HAVE BEEN USED WHERE POSSIBLE. CONTRACTOR SHALL MAKE EXTENSIVE VERIFICATION OF EXISTING EQUIPMENT PRIOR TO COMMENCING FULL SCALE DEMOLITION/RENOVATION ACTIVITIES.

KEY NOTES.

(1) EXISTING TERMINAL BLOCKS TO REMAIN.

REFERENCE DRAWINGS.

E–CWS–011 – E–CWS–017 – CONTROL SCHEMATICS

E–SP–001 – CONSTRUCTION SEQUENCE

2/21/2005

HARUTUNIAN ENGINEERING INCORPORATED
ENGINEERING AND ENVIRONMENTAL CONSULTANTS
305 EAST HUNTLAND DRIVE SUITE 300
AUSTIN, TEXAS 78752

REUSE OF DOCUMENTS
This document and the ideas and designs incorporated herein as an instrument of professional service has been developed, designed and prepared by Harutunian Engineering, Inc. and is not to be used, in whole or part, for any other project without the written authorization of Water District No. 10 and Harutunian Engineering, Inc. © 2005

HEI
HEI
HEI
FEBRUARY 2005
NONE

TRAVIS COUNTY WATER CONTROL & IMPROVEMENT DISTRICT NO 10
PUMP STATION NO 1

TONE TELEMETRY SYSTEM – DEMOLITION

2002–210 | SHEET 70 | E–CWS–018

WIRING AND TERMINAL DEVICE LEGEND:

— — INDICATES WIRING BETWEEN PANELS OR TO A FIELD MOUNTED DEVICE

o DEVICE WIRING TERMINAL

▲ EXISTING TERMINAL BLOCK LOCATED IN EXISTING TONE TELEMETRY CABINET. ANY DEVICE SHOWN WITH DEVICE TERMINALS CONNECTED DIRECTLY TO THESE SYMBOLS WITH SOLID LINES IS LOCATED IN OR ON THE EQUIPMENT

GENERAL NOTES:

1. AN ATTEMPT IS MADE TO SHOW ALL EXISTING EQUIPMENT ON THIS ELECTRICAL CONTROL SCHEMATIC. REGARDLESS, THE CONTRACTOR IS RESPONSIBLE FOR VERIFYING THE APPLICABLE CONDUIT/WIRING FOR ELECTRICAL CONTROLS TO EXISTING EQUIPMENT WHETHER SHOWN HERE OR NOT. THE INFORMATION SHOWN HEREIN SHALL NOT RELIEVE THE CONTRACTOR THE RESPONSIBILITY OF CONFIRMING OR FINDING THE MOTOR CONTROL CENTER/CIRCUIT NUMBER/PANELBOARD/ETC., SERVING THE EXISTING LOAD. THE CONTRACTOR SHALL EXERCISE EVERY PRECAUTION TO ELIMINATE HAZARDS IN DISCONNECTING ANY DEVICE FROM AN ELECTRICAL CIRCUIT. THE CONTRACTOR MUST EXERCISE EXTREME CARE AS THERE ARE NO AVAILABLE AS BUILT RECORDS IDENTIFYING THE ROUTING OF ALL CONDUIT/WIRING BETWEEN THE VARIOUS MOTOR CONTROL CENTERS, CONTROL PANELS, LIGHTING PANELS, LOADS, ETC., AND THEIR COORDINATION WITH THE EXISTING ELECTRICAL SYSTEM. THEREFORE, THE CONTRACTOR IS TO EXERCISE EXTREME CARE, VERIFY THE ROUTING OF EXISTING CONDUIT/WIRING PRIOR TO COMMENCING FULL SCALE DEMOLITION OR RENOVATION ACTIVITIES. FOLLOWING THE DISCOVERY VERIFICATION OF THE EXISTING FIELD CONDITIONS, SHOULD ADJUSTMENTS BECOME A NECESSITY TO THE EXISTING OR PROPOSED SYSTEM (AS APPLICABLE), THE EXISTING DISCOVERED FIELD CONDITIONS MUST BE BROUGHT TO THE ENGINEER'S ATTENTION FOR EXECUTION OF THE NECESSARY ADJUSTMENTS/MODIFICATIONS.

2. THE CONTRACTOR SHALL BE AWARE THAT WHEN ANY EXISTING EQUIPMENT IS DISCONNECTED, REMOVED, RELOCATED OR OTHERWISE MODIFIED, THE POSSIBILITY MAY EXIST FOR SUCH ACTION TO LEAD TO INTERRUPTION OF OPERATION OF THE PUMP STATION. IF EXTREME CARE, VERIFICATION, AND VALIDATION IS NOT CAREFULLY EXERCISED PRIOR TO COMMENCEMENT OF SUCH DEMOLITION ACTIVITY THE CONTRACTOR SHALL KNOW THAT ANY INTERRUPTION TO THE CONTINUITY OF PUMP STATION OPERATION AT ITS EXPECTED PUMPING CAPACITY IS UNACCEPTABLE DURING THE CONSTRUCTION COURSE OF THIS PROJECT. HOWEVER, SHOULD ANY INTERRUPTION TO PUMP STATION OPERATION OCCUR FOR ANY UNFORESEEN REASON, WHETHER TOTALLY ACCIDENTAL OR DUE TO IMPROPER FIELD INVESTIGATION AND IMPROPER PLANNING PRIOR TO COMMENCEMENT OF THE ELECTRICAL/INSTRUMENTATION DEMOLITION EFFORT. THE RESPONSIBLE CONTRACTOR SHALL DETERMINE THE PROBLEM, CORRECT IT, AND START UP THE INTERRUPTED EQUIPMENT WITHIN A CERTAIN TIME PERIOD AS DETERMINED BY THE OWNER AT NO ADDITIONAL COST TO THE OWNER. THE CONTRACTOR SHALL PROVIDE CONTINUOUS, 24-HOUR, LABOR, EQUIPMENT, MATERIAL, AND ACCESSORIES UNTIL SUCH TIME THAT ANY EFFECTED EQUIPMENT OPERATES AS PREVIOUSLY OPERATED, AT NO ADDITIONAL COST TO THE OWNER AND TO THE OWNER'S SATISFACTION.

3. EQUIPMENT/CONDUIT TAGS/NAMES HAVE BEEN ARBITRARILY ASSIGNED TO AID IN THE DRAWINGS. SOME EXISTING TAGS/NAMES HAVE BEEN USED WHERE POSSIBLE. CONTRACTOR SHALL MAKE EXTENSIVE VERIFICATION OF EXISTING EQUIPMENT PRIOR TO COMMENCING FULL SCALE DEMOLITION/RENOVATION ACTIVITIES.

4. DARK LINEWORK DENOTES PROPOSED EQUIPMENT. LIGHT LINEWORK DENOTES EXISTING EQUIPMENT

REFERENCE DRAWINGS:

E-PLC-002 – PLC I/O WIRING SCHEMATIC

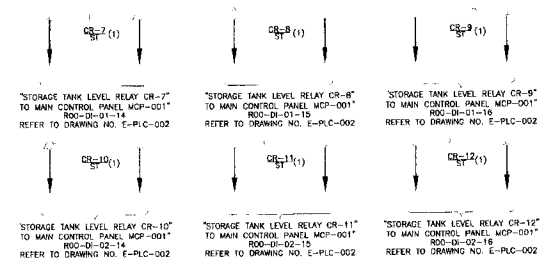

TONE TELEMETRY SYSTEM
LOCATED AT PUMP STATION NO. 1 – RENOVATION

HARUTUNIAN ENGINEERING INCORPORATED
ENGINEERING AND ENVIRONMENTAL CONSULTANTS
305 EAST HUNTLAND DRIVE SUITE 300
AUSTIN, TEXAS 78752

REUSE OF DOCUMENTS
This document and the ideas and designs incorporated herein, as an instrument of professional service, has been developed, designed and prepared by Harutunian Engineering, Inc. and is not to be used, in whole or part, for any other project without the written authorization of Water District No. 10 and Harutunian Engineering, Inc. © 2005

HEI
HEI
FEBRUARY 2005
NONE

TRAVIS COUNTY WATER CONTROL & IMPROVEMENT DISTRICT NO 10
PUMP STATION NO 1

TONE TELEMETRY SYSTEM – RENOVATION

PROJECT NO. 2002-210 | SHEET 71 | E-CWS-019

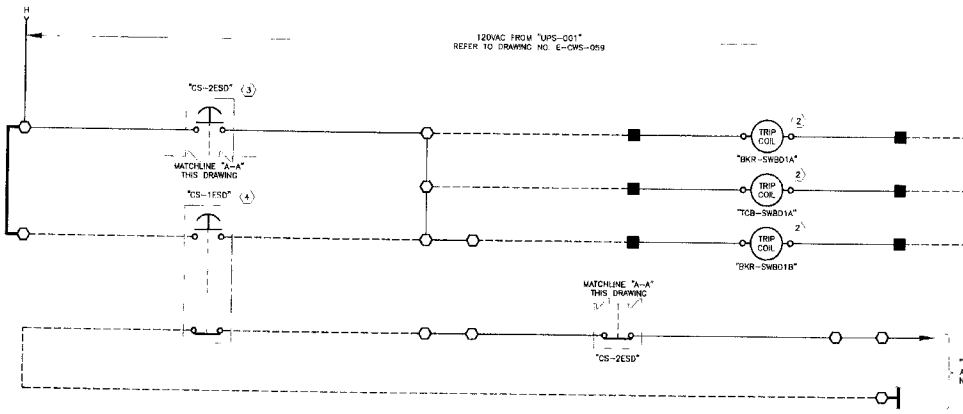

WIRING AND TERMINAL DEVICE LEGEND:

- - - - INDICATES WIRING BETWEEN PANELS OR TO A FIELD MOUNTED DEVICE.

○ DEVICE WIRING TERMINAL

■ PROPOSED TERMINAL BLOCK LOCATED IN PROPOSED 480V SWITCHBOARD (SWBD) "SWBD-001A" OR "SWBD-001B", AS APPLICABLE. ANY DEVICE SHOWN WITH DEVICE WIRING TERMINALS CONNECTED DIRECTLY TO THESE SYMBOLS WITH SOLID LINES IS ALSO LOCATED IN PROPOSED 480V MCC "SWBD-001A" OR "SWBD-001B", AS APPLICABLE.

□ PROPOSED TERMINAL BLOCK LOCATED IN PROPOSED 480V MOTOR CONTROL CENTER (MCC) "MCC-001A" OR "MCC-001B", AS APPLICABLE. ANY DEVICE SHOWN WITH DEVICE WIRING TERMINALS CONNECTED DIRECTLY TO THESE SYMBOLS WITH SOLID LINES IS ALSO LOCATED IN PROPOSED 480V MCC "MCC-001A" OR "MCC-001B", AS APPLICABLE.

⬡ PROPOSED TERMINAL BLOCK LOCATED IN PROPOSED MAIN CONTROL PANEL "MCP-001" ANY DEVICE SHOWN WITH DEVICE WIRING TERMINALS CONNECTED DIRECTLY TO THESE SYMBOLS WITH SOLID LINES IS ALSO LOCATED IN MAIN CONTROL PANEL "MCP-001"

KEY NOTES:

(1) NORMALLY OPEN AND NORMALLY CLOSED AUXILIARY CONTACTS FOR MONITORING THE STATUS OF THE BREAKER.

(2) CIRCUIT BREAKER SHUNT TRIP COIL REFER TO DRAWING NO.'S E-DL-008 AND E-DL-009.

(3) BREAK GLASS TYPE MAINTAINED ACTION PUSH BUTTON WITH MINIMUM OF ONE NORMALLY OPEN AND ONE NORMALLY CLOSED CONTACT AS MANUFACTURED BY "ALLEN-BRADLEY" BULLETIN 800T-S9N OR APPROVED EQUAL. FURNISH AND INSTALL ONE NORMALLY OPEN AND ONE NORMALLY CLOSED SPARE CONTACT OVER THAT REQUIRED HERE. ALL CONTACTS TO BE RATED FOR 10 AMPERE AT 120VAC. FURNISH AND INSTALL PUSH BUTTON WITH BREAK-GLASS HAMMER AND HAMMER CHAIN ACCESSORIES. FURNISH AND INSTALL HAMMER/HAMMER CHAIN TO FRONT OF "MCP-001" WITH STAINLESS STEEL HARDWARE AND MAKE ALL FINAL CONNECTIONS. LEGEND PLATE TO READ "PUMP STATION EMERGENCY SHUTDOWN". FURNISH A MINIMUM OF 4 REPLACEMENT GLASS DISCS, AS MANUFACTURED BY "ALLEN-BRADLEY" BULLETIN 800T-N28, OR APPROVED EQUAL. PROVIDE A SUBMITTAL IN ACCORDANCE WITH SPECIFICATION SECTIONS 01300, 01730, AND 17200. ALSO REFER TO THE "MCP-001" EQUIPMENT SCHEDULE ON E-CWS-053 FOR ADDITIONAL INFORMATION.

(4) BREAK GLASS PUSH BUTTON CONTROL STATION WITH A MINIMUM OF ONE NORMALLY OPEN AND ONE NORMALLY CLOSED CONTACT AS MANUFACTURED BY ALLEN-BRADLEY BULLETIN 800T-NX115, OR APPROVED EQUAL. LEGEND PLATE TO READ "PUMP STATION EMERGENCY SHUTDOWN" FURNISH AND INSTALL ONE NORMALLY OPEN AND ONE NORMALLY CLOSED SPARE CONTACT OVER THAT REQUIRED HERE. ALL CONTACTS TO BE RATED FOR 10 AMPERE AT 120VAC. FURNISH AND INSTALL PUSH BUTTON WITH BREAK-GLASS HAMMER AND HAMMER CHAIN ACCESSORIES. FURNISH AND INSTALL HAMMER/HAMMER CHAIN TO FRONT OF CONTROL STATION WITH STAINLESS STEEL HARDWARE AND MAKE ALL FINAL CONNECTIONS. FURNISH A MINIMUM OF 4 REPLACEMENT GLASS DISCS, AS MANUFACTURED BY "ALLEN-BRADLEY" BULLETIN 800T-N28, OR APPROVED EQUAL. PROVIDE A SUMITTAL IN ACCORDANCE WITH SPECIFICATION SECTIONS 01300, 01730, AND 17200.

GENERAL NOTES:

1 CLOSELY AND CAREFULLY COORDINATE WITH THE SWITCHBOARD AND MOTOR CONTROL CENTER MANUFACTURER AND MAKE ALL FINAL CONNECTIONS. ALSO REFER TO THE ELECTRICAL ONE-LINE DIAGRAMS AND THE SPECIFICATIONS FOR ADDITIONAL INFORMATION.

REFERENCE DRAWINGS:

E-DL-007 – F-DL-013 – ONE-LINE DIAGRAMS

E-PLC-002 – E-PLC-004 – PLC I/O WIRING SCHEMATICS

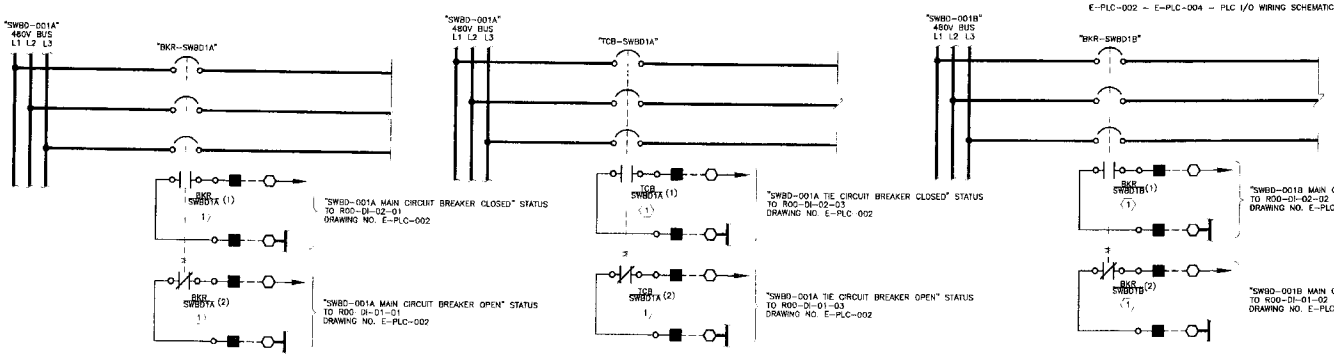

BAR LENGTH IS ORIGINAL DRAWN TO 36" IN. REDUCE SCALE ACCORDINGLY

2/2/2005

HARUTUNIAN ENGINEERING INCORPORATED
ENGINEERING AND ENVIRONMENTAL CONSULTANTS
305 EAST HUNTLAND DRIVE SUITE 500
AUSTIN, TEXAS 78752

REUSE OF DOCUMENTS
This document and the ideas and designs incorporated herein as an instrument of professional service has been developed, designed and prepared by Harutunian Engineering, Inc. and is not to be used, in whole or part, for any other project without the written authorization of Water District No. 10 and Harutunian Engineering, Inc. © 2005

DR. CHK. HEI
DR. SUPV. HEI
DR. SUPV. HEI
DATE FEBRUARY 2005
SCALE NONE

TRAVIS COUNTY WATER CONTROL & IMPROVEMENT DISTRICT NO. 10
PUMP STATION NO 1

480V SWITCHBOARD
CIRCUIT BREAKER CONTROL SCHEMATICS

2002-210 | SHEET 72 | DRAWING E-CWS-020

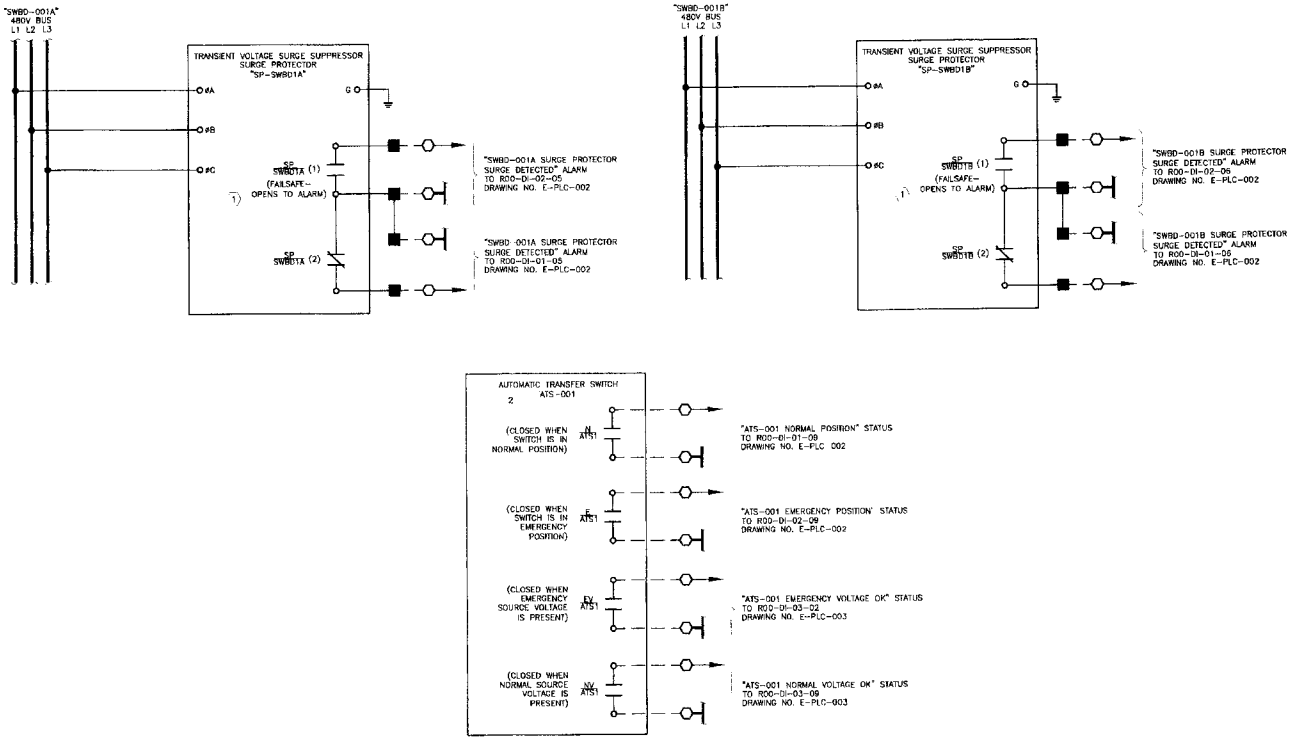

AUTOMATIC TRANSFER SWITCH
"ATS-001" FIELD INTERCONNECT CONTROL WIRING SCHEMATIC

WIRING AND TERMINAL DEVICE LEGEND:

— — INDICATES WIRING BETWEEN PANELS OR TO A FIELD MOUNTED DEVICE.

o DEVICE WIRING TERMINAL.

■ PROPOSED TERMINAL BLOCK LOCATED IN PROPOSED 480V SWITCHBOARD (SWBD) "SWBD-001A" OR "SWBD-001B", AS APPLICABLE. ANY DEVICE SHOWN WITH DEVICE WIRING TERMINALS CONNECTED DIRECTLY TO THESE SYMBOLS WITH SOLID LINES IS ALSO LOCATED IN PROPOSED 480V MCC "SWBD-001A" OR "SWBD-001B" AS APPLICABLE.

□ PROPOSED TERMINAL BLOCK LOCATED IN PROPOSED 480V MOTOR CONTROL CENTER (MCC) "MCC-001A" OR "MCC-001B", AS APPLICABLE. ANY DEVICE SHOWN WITH DEVICE WIRING TERMINALS CONNECTED DIRECTLY TO THESE SYMBOLS WITH SOLID LINES IS ALSO LOCATED IN PROPOSED 480V MCC "MCC-001A" OR "MCC-001B" AS APPLICABLE.

○ PROPOSED TERMINAL BLOCK LOCATED IN PROPOSED MAIN CONTROL PANEL "MCP-001" ANY DEVICE SHOWN WITH DEVICE WIRING TERMINALS CONNECTED DIRECTLY TO THESE SYMBOLS WITH SOLID LINES IS ALSO LOCATED IN MAIN CONTROL PANEL "MCP-001"

KEY NOTES:

1. NORMALLY OPEN AND NORMALLY CLOSED, FORM C AUXILIARY ALARM CONTACTS FOR MONITORING THE STATUS OF THE TRANSIENT VOLTAGE SURGE SUPRESSOR SURGE PROTECTOR.
2. ONLY THE FIELD CONTROL WIRING INTERCONNECTIONS TO THE PROPOSED AUTOMATIC TRANSFER SWITCH ARE SHOWN IN THIS DRAWING.

GENERAL NOTES:

1. CLOSELY AND CAREFULLY COORDINATE WITH THE SWITCHBOARD AND MOTOR CONTROL CENTER MANUFACTURER AND MAKE ALL FINAL CONNECTIONS. ALSO REFER TO THE ELECTRICAL ONE-LINE DIAGRAMS AND THE SPECIFICATIONS FOR ADDITIONAL INFORMATION.

REFERENCE DRAWINGS:

E-OL-007 – E-OL-013 – ONE-LINE DIAGRAMS

E-PLC-002 – E-PLC-004 – PLC I/O WIRING SCHEMATICS

BAR LENGTH ON ORIGINAL DRAWING EQUALS ONE INCH. ADJUST SCALE ACCORDINGLY

STATE OF TEXAS
K. A. HARUTUNIAN
PROFESSIONAL ENGINEER
2/21/2005

HARUTUNIAN ENGINEERING INCORPORATED
ENGINEERING AND ENVIRONMENTAL CONSULTANTS
305 EAST HUNTLAND DRIVE SUITE 500
AUSTIN, TEXAS 78752

REUSE OF DOCUMENTS
This document and the ideas and designs incorporated herein as an instrument of professional service has been developed, designed and prepared by Harutunian Engineering, Inc. and is not to be used, in whole or part, for any other project without the written authorization of Water District No. 10 and Harutunian Engineering, Inc. © 2005

DESIGNED BY	HEI
DRAWN BY	HEI
CHECKED BY	HEI
DATE	FEBRUARY 2005
SCALE	NONE

TRAVIS COUNTY WATER CONTROL & IMPROVEMENT DISTRICT NO. 10
PUMP STATION NO. 1

480V SWITCHBOARD
TRASIENT VOLTAGE SURGE SUPPRESSOR (TVSS)
SURGE PROTECTOR CONTROL SCHEMATICS

PROJECT NO. 2002-210 | SHEET 73 | DWG E-CWS-021

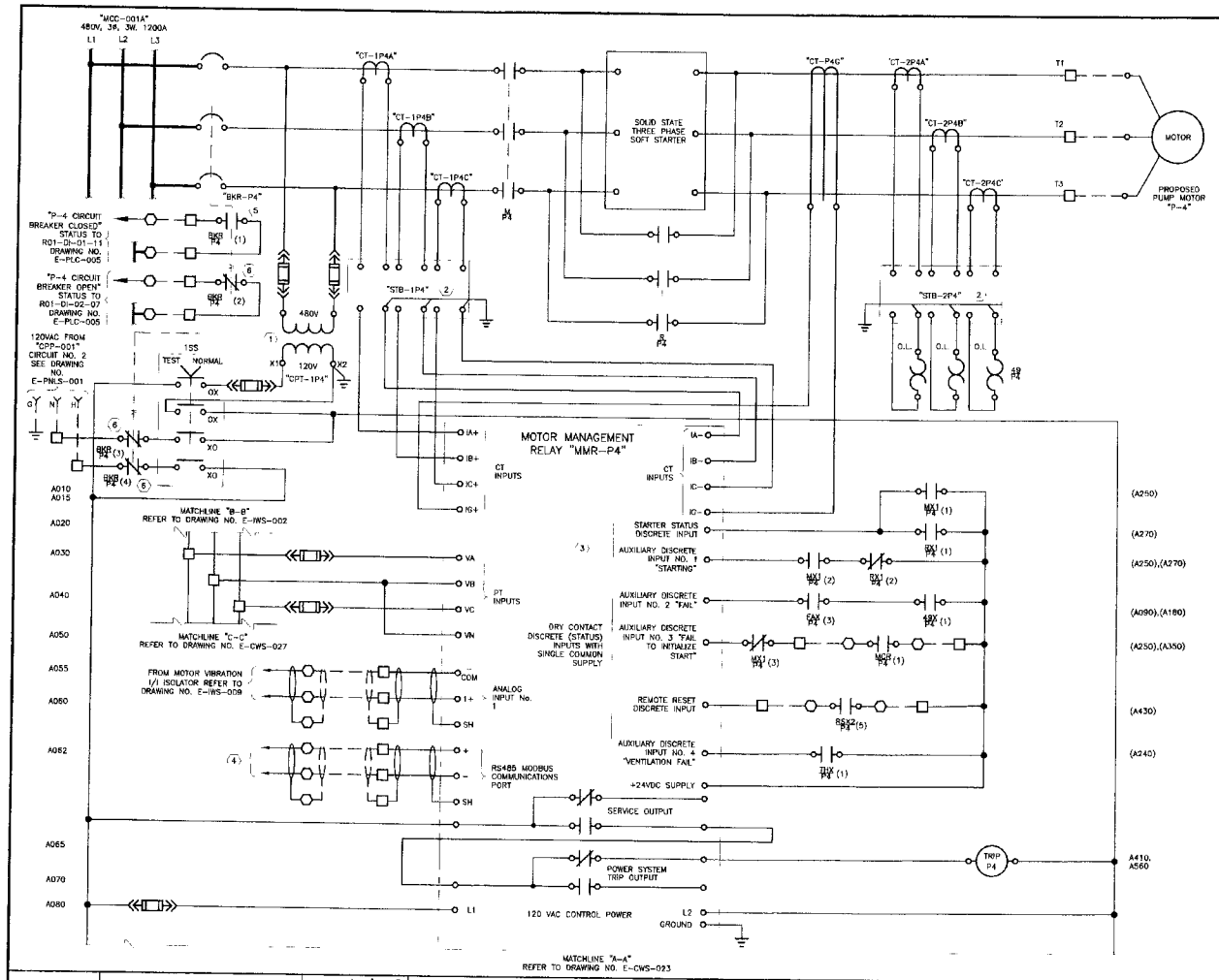

WIRING AND TERMINAL DEVICE LEGEND:

— — INDICATES WIRING BETWEEN PANELS OR TO A FIELD MOUNTED DEVICE.

○ DEVICE WIRING TERMINAL.

□ PROPOSED TERMINAL BLOCK LOCATED IN PROPOSED 480V MOTOR CONTROL CENTER (MCC) "MCC-001A" OR "MCC-001B", AS APPLICABLE. ANY DEVICE SHOWN WITH DEVICE WIRING TERMINALS CONNECTED DIRECTLY TO THESE SYMBOLS WITH SOLID LINES IS ALSO LOCATED IN PROPOSED 480V MCC "MCC-001A" OR "MCC-001B", AS APPLICABLE.

⬡ PROPOSED TERMINAL BLOCK LOCATED IN PROPOSED MAIN CONTROL PANEL "MCP-001" ANY DEVICE SHOWN WITH DEVICE WIRING TERMINALS CONNECTED DIRECTLY TO THESE SYMBOLS WITH SOLID LINES IS ALSO LOCATED IN MAIN CONTROL PANEL "MCP-001"

△ TERMINAL BLOCK LOCATED IN FIELD MOUNTED EQUIPMENT AS NOTED. ANY DEVICE SHOWN WITH DEVICE WIRING TERMINALS CONNECTED DIRECTLY TO THESE SYMBOLS WITH SOLID LINES IS ALSO LOCATED IN OR ON EQUIPMENT

KEY NOTES:

(1) CONTROL POWER TRANSFORMER SHALL HAVE MINIMUM RATING OF 1500VA. TRANSFORMER SHALL BE SIZED ACCORDING TO ELECTRICAL SPECIFICATIONS.

(2) FURNISH AND INSTALL THE SHORTING/TAP CHANGING TERMINAL BLOCKS (STB) IN THE METERING COMPARTMENT FOR TERMINATING THE CABLING FROM THE PROPOSED CURRENT TRANSFORMERS.

(3) NOT ALL CONNECTIONS TO THE MOTOR MANAGEMENT RELAY ARE SHOWN ON THIS DRAWING. REFER TO DRAWING E-IWS-003 FOR ADDITIONAL CONNECTIONS.

(4) TO/FROM RS485/232 COMMUNICATION CONVERTER LOCATED INSIDE MAIN CONTROL PANEL "MCP-001" REFER TO DRAWING NO. E-PLC-001 FOR ADDITIONAL INFORMATION.

(5) CONTACT OPEN WHEN ASSOCIATED CIRCUIT BREAKER IS OPEN.

(6) CONTACT CLOSED WHEN ASSOCIATED CIRCUIT BREAKER IS CLOSED.

REFERENCE DRAWINGS:

E-OL-010 – E-OL-013 – ONE-LINE DIAGRAMS

E-IWS-003 – MMR WIRING SCHEMATIC

E-PLC-001 – PLC ARCHITECTURE

E-PLC-005 – E-PLC-007 – PLC I/O WIRING SCHEMATICS

E-CWS-051 – E-CWS-052 – MCP ELEVATIONS

CONTROL LOGIC DEVICE DESCRIPTIONS

RUNG	DESCRIPTION
A065	POWER SYSTEM FAILURE RELAY: NORMALLY ENERGIZED. DE-ENERGIZES WHEN MMR DETECTS A POWER SYSTEM FAILURE.

BAR LENGTH ON ORIGINAL DRAWING EQUALS ONE INCH. ADJUST SCALE ACCORDINGLY

STATE OF TEXAS REGISTERED PROFESSIONAL ENGINEER 2/21/2005

HARUTUNIAN ENGINEERING INCORPORATED
ENGINEERING AND ENVIRONMENTAL CONSULTANTS
305 EAST HUNTLAND DRIVE SUITE 300
AUSTIN, TEXAS 78752

REUSE OF DOCUMENTS
This document and the ideas and designs incorporated herein as an instrument of professional service has been developed, designed and prepared by Harutunian Engineering, Inc. and is not to be used, in whole or part, for any other project without the written authorization of Water District No. 10 and Harutunian Engineering, Inc. © 2005

DR. JD B. HEI
DESIGN HEI
CHECKED HEI
DATE FEBRUARY 2005
SCALE NONE

TRAVIS COUNTY WATER CONTROL & IMPROVEMENT DISTRICT NO 10
PUMP STATION NO. 1

PUMP MOTOR "P-4" CONTROL SCHEMATIC
(SHEET 1 OF 5)

PROJ. NO. 2002-210 | SHEET 74 | DWG. NO. E-CWS-022

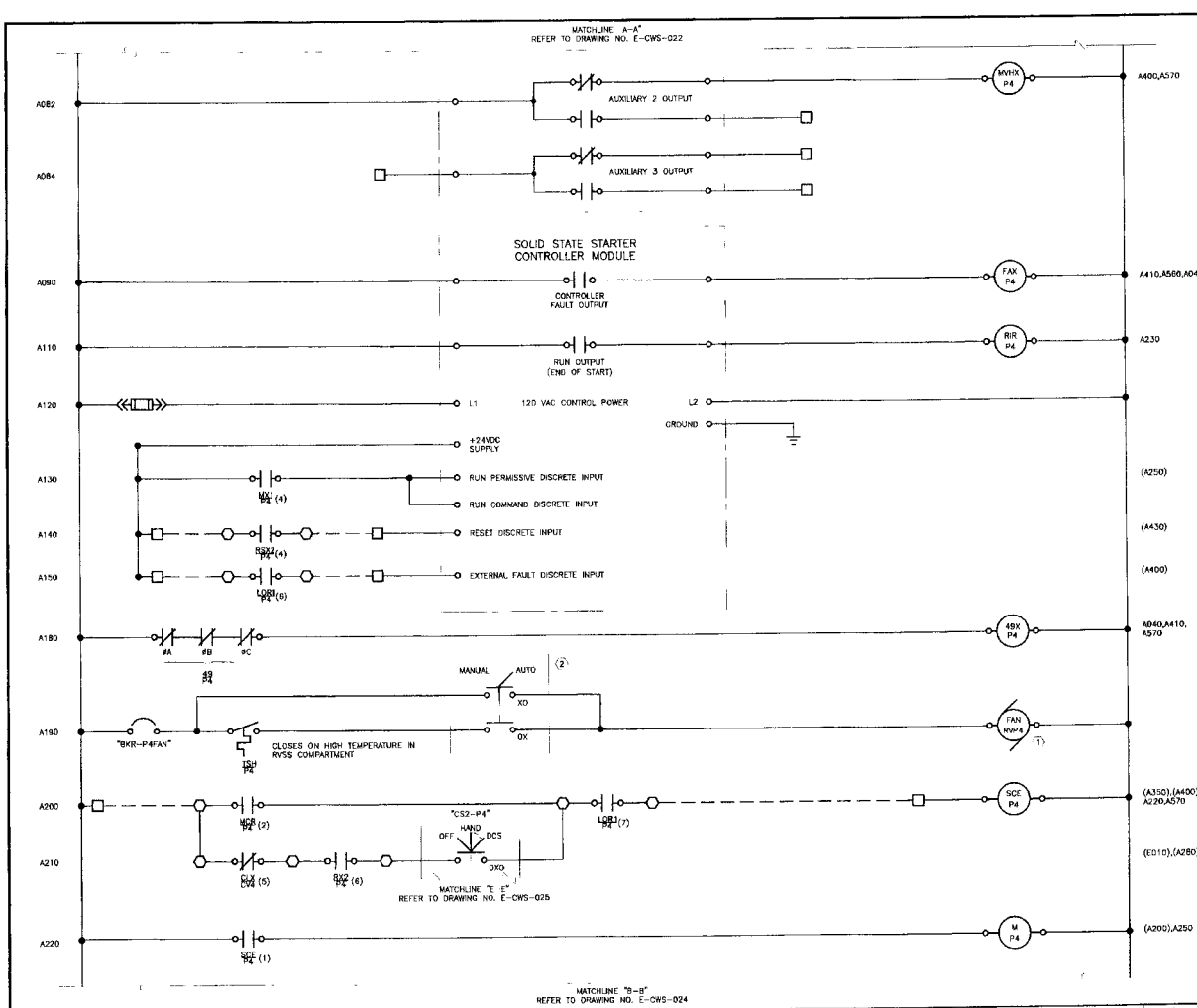

WIRING AND TERMINAL DEVICE LEGEND:

- — — INDICATES WIRING BETWEEN PANELS OR TO A FIELD MOUNTED DEVICE
- o DEVICE WIRING TERMINAL
- □ PROPOSED TERMINAL BLOCK LOCATED IN PROPOSED 480V MOTOR CONTROL CENTER (MCC) "MCC-001A" OR "MCC-001B", AS APPLICABLE. ANY DEVICE SHOWN WITH DEVICE WIRING TERMINALS CONNECTED DIRECTLY TO THESE SYMBOLS WITH SOLID LINES IS ALSO LOCATED IN PROPOSED 480V MCC "MCC-001A" OR "MCC-001B", AS APPLICABLE.
- ⬡ PROPOSED TERMINAL BLOCK LOCATED IN PROPOSED MAIN CONTROL PANEL "MCP-001" ANY DEVICE SHOWN WITH DEVICE WIRING TERMINALS CONNECTED DIRECTLY TO THESE SYMBOLS WITH SOLID LINES IS ALSO LOCATED IN MAIN CONTROL PANEL "MCP-001"
- △ TERMINAL BLOCK LOCATED IN FIELD MOUNTED EQUIPMENT AS NOTED. ANY DEVICE SHOWN WITH DEVICE WIRING TERMINALS CONNECTED DIRECTLY TO THESE SYMBOLS WITH SOLID LINES IS ALSO LOCATED IN OR ON EQUIPMENT

KEY NOTES:

(1) MOUNT TO FACE OF MOTOR CONTROL CENTER. ONLY ONE FAN IS SHOWN HERE FOR CLARITY. MCC MANUFACTURER TO FURNISH AND INSTALL QUANTITY OF FANS AS REQUIRED IN ACCORDANCE WITH MCC MANUFACTURER'S RECOMMENDATIONS.

(2) MOUNT INSIDE OF RVSS METERING AND CONTROLS COMPARTMENT OF THE MOTOR CONTROL CENTER. DO NOT MOUNT TO THE FACE OF THE MOTOR CONTROL CENTER

REFERENCE DRAWINGS:

E-OL-010 – E-OL-013 – ONE-LINE DIAGRAMS

E-PLC-001 – PLC ARCHITECTURE

E-PLC-005 – E-PLC-007 – PLC I/O WIRING SCHEMATICS

E-CWS-051 – E-CWS-052 – MCP ELEVATIONS

CONTROL LOGIC DEVICE DESCRIPTIONS

RUNG	DESCRIPTION
A082	MOTOR HIGH VIBRATION AUXILIARY RELAY: NORMALLY ENERGIZED. DE-ENERGIZES WHEN MOTOR MANAGEMENT RELAY DETECTS HIGH MOTOR VIBRATION.
A090	CONTROLLER FAILURE AUXILIARY RELAY: NORMALLY ENERGIZED. DE-ENERGIZES WHEN SOFT STARTER CONTROLLER MODULE DETECTS A FAULT
A110	RUN INTERFACE AUXILIARY RELAY: NORMALLY DE-ENERGIZED. ENERGIZED WHEN THE MOTOR IS RUNNING AT FULL SPEED AND VOLTAGE.
A180	OVERLOAD AUXILIARY RELAY: NORMALLY ENERGIZED, RELAY DE-ENERGIZES ON MOTOR OVERLOAD.
A190	RVSS STARTER COMPARTMENT COOLING FAN: NORMALLY DE-ENERGIZED, FAN ENERGIZES WHEN THE SELECTOR SWITCH IS IN "AUTO" AND THE TEMPERATURE SWITCH DETECTS HIGH TEMPERATURE INSIDE THE MOTOR CONTROL CENTER RVSS STARTER COMPARTMENT, OR THE SELECTOR SWITCH IS IN "MANUAL"
A200	STARTER CONTROL ENABLE AUXILIARY RELAY: NORMALLY DE-ENERGIZED. ENERGIZED WHEN THE LOCKOUT RELAY IS ENERGIZED AND (THE MCR RELAY IS ENERGIZED) OR WHEN (THE VALVE IS NOT FULLY CLOSED AND THE RX2 RELAY IS ENERGIZED WHILE THE SELECTOR SWITCH IS IN "HAND".)
A220	MAIN CONTACTOR COIL: NORMALLY DE-ENERGIZED. ENERGIZED WHEN THE SCE RELAY IS ENERGIZED.

HARUTUNIAN ENGINEERING INCORPORATED
ENGINEERING AND ENVIRONMENTAL CONSULTANTS
305 EAST HUNTLAND DRIVE SUITE 500
AUSTIN, TEXAS 78752

REUSE OF DOCUMENTS
This document and the ideas and designs incorporated herein as an instrument of professional service has been developed, designed and prepared by Harutunian Engineering, Inc. and is not to be used, in whole or part, for any other project without the written authorization of Water District No. 10 and Harutunian Engineering, Inc. © 2005

HEI
HEI
HEI
FEBRUARY 2005
NONE

TRAVIS COUNTY WATER CONTROL & IMPROVEMENT DISTRICT NO 10
PUMP STATION NO 1

PUMP MOTOR "P-4" CONTROL SCHEMATIC
(SHEET 2 OF 5)

2002-210 | SHEET 75 | E-CWS-023

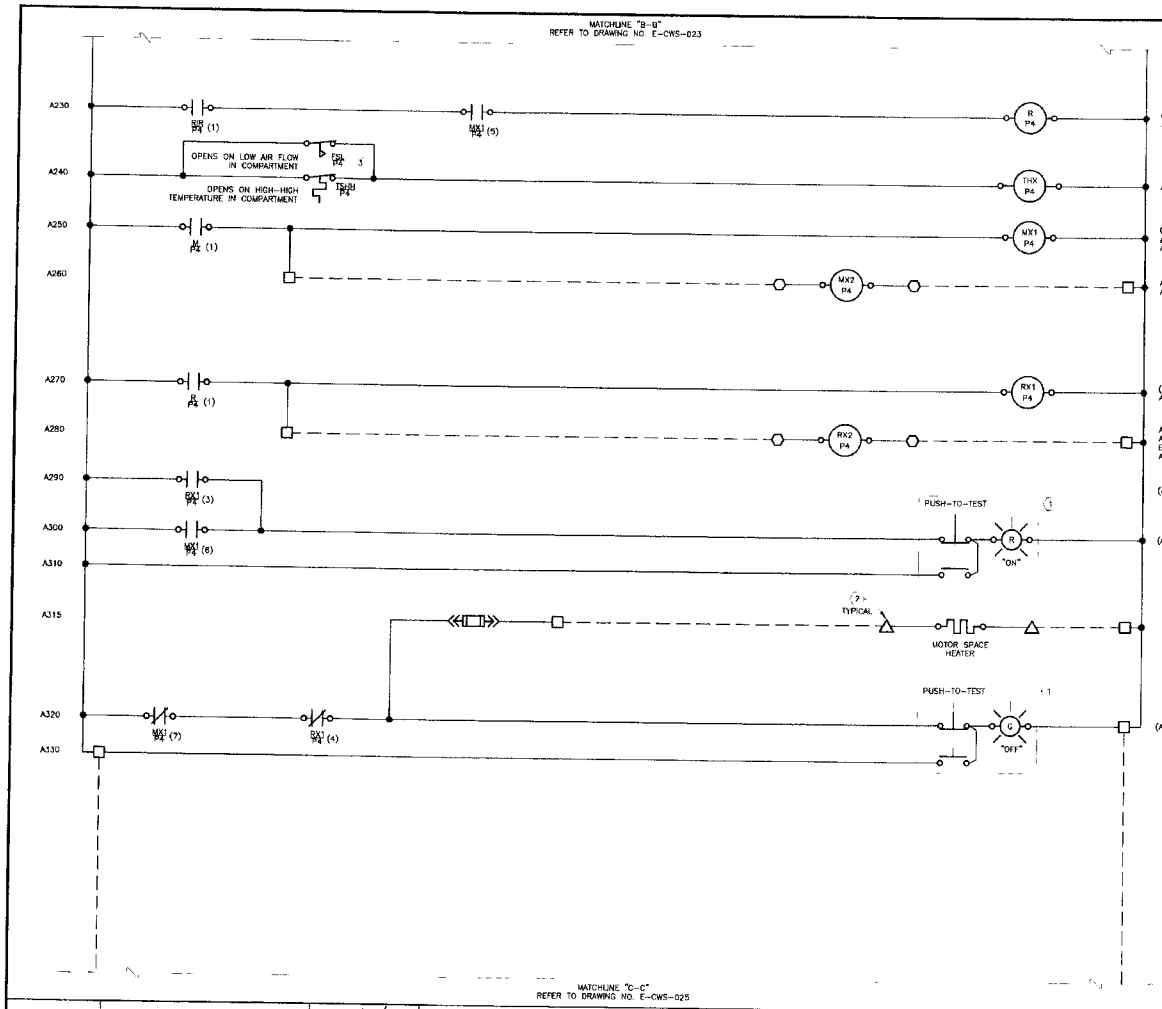

WIRING AND TERMINAL DEVICE LEGEND:

- — — INDICATES WIRING BETWEEN PANELS OR TO A FIELD MOUNTED DEVICE.
- ○ DEVICE WIRING TERMINAL
- □ PROPOSED TERMINAL BLOCK LOCATED IN PROPOSED 480V MOTOR CONTROL CENTER (MCC) "MCC-001A" OR "MCC-001B", AS APPLICABLE. ANY DEVICE SHOWN WITH DEVICE WIRING TERMINALS CONNECTED DIRECTLY TO THESE SYMBOLS WITH SOLID LINES IS ALSO LOCATED IN PROPOSED 480V MCC "MCC-001A" OR "MCC-001B", AS APPLICABLE.
- ⬡ PROPOSED TERMINAL BLOCK LOCATED IN PROPOSED MAIN CONTROL PANEL "MCP-001" ANY DEVICE SHOWN WITH DEVICE WIRING TERMINALS CONNECTED DIRECTLY TO THESE SYMBOLS WITH SOLID LINES IS ALSO LOCATED IN MAIN CONTROL PANEL "MCP-001"
- △ TERMINAL BLOCK LOCATED IN FIELD MOUNTED EQUIPMENT AS NOTED. ANY DEVICE SHOWN WITH DEVICE WIRING TERMINALS CONNECTED DIRECTLY TO THESE SYMBOLS WITH SOLID LINES IS ALSO LOCATED IN OR ON EQUIPMENT.

KEY NOTES:

1. INDICATING PILOT LIGHT WITH INTEGRAL MOMENTARY ACTION "PUSH-TO-TEST" PUSHBUTTON. REFER TO ELECTRICAL SPECIFICATIONS.
2. PROPOSED TERMINAL BLOCK LOCATED IN SPACE HEATER TERMINATION BOX LOCATED ON MOTOR.
3. PROPOSED AIR FLOW SWITCH DETECTS POSITIVE AIR FLOW THROUGH THE RVSS STARTER COMPARTMENT OF THE MOTOR CONTROL CENTER. ALSO REFER TO THE SPECIFICTIONS FOR ADDITIONAL INFORMATION.

REFERENCE DRAWINGS:

E-DL-010 – E-DL-013 – ONE-LINE DIAGRAMS

E-PLC-001 – PLC ARCHITECTURE

E-PLC-005 – E-PLC-007 – PLC I/O WIRING SCHEMATICS

E-CWS-051 – E-CWS-052 – MCP ELEVATIONS

CONTROL LOGIC DEVICE DESCRIPTIONS

RUNG	DESCRIPTION
A230	RUN CONTACTOR COIL: NORMALLY DE-ENERGIZED. ENERGIZED WHEN THE RIR AND MX1 RELAYS ARE ENERGIZED.
A240	RVSS COMPARTMENT HIGH TEMPERATURE RELAY: NORMALLY ENERGIZED. DEENERGIZED WHEN A HIGH TEMPERATURE IS DETECTED AND NO COOLING AIR FLOW IS DETECTED THROUGH THE RVSS COMPARTMENT
A250	MAIN CONTACTOR AUXILIARY RELAY 1: NORMALLY DE-ENERGIZED. ENERGIZED WHEN THE MAIN (M) CONTACTOR COIL IS ENERGIZED.
A260	MAIN CONTACTOR AUXILIARY RELAY 2: NORMALLY DE-ENERGIZED. ENERGIZED WHEN THE MAIN (M) CONTACTOR COIL IS ENERGIZED.
A270	RUN CONTACTOR AUXILIARY RELAY 1: NORMALLY DE-ENERGIZED. ENERGIZED WHEN THE RUN (R) CONTACTOR COIL IS ENERGIZED.
A280	RUN CONTACTOR AUXILIARY RELAY 2: NORMALLY DE-ENERGIZED. ENERGIZED WHEN THE RUN (R) CONTACTOR COIL IS ENERGIZED.

BAR IS 1 INCH ON ORIGINAL DRAWING. SCALE ONE INCH AT 1/1 SCALE ACCORDING TO

STATE OF TEXAS
K. Harutunian
REGISTERED PROFESSIONAL ENGINEER
2/21/2005

HARUTUNIAN ENGINEERING INCORPORATED
ENGINEERING AND ENVIRONMENTAL CONSULTANTS
309 EAST HUNTLAND DRIVE SUITE 500
AUSTIN, TEXAS 78752

REUSE OF DOCUMENTS
This document and the ideas and designs incorporated herein as an instrument of professional service has been developed, designed and prepared by Harutunian Engineering, Inc. and is not to be used, in whole or part, for any other project without the written authorization of Water District No. 10 and Harutunian Engineering, Inc. © 2005

DATE PROJ

REV. BY DR. HEI
DESIGNED BY HEI
DWN BY HEI
SUBMITTED DATE FEBRUARY 2005
SCALE NONE

TRAVIS COUNTY WATER CONTROL & IMPROVEMENT DISTRICT NO. 10
PUMP STATION NO. 1

PUMP MOTOR "P-4" CONTROL SCHEMATIC
(SHEET 3 OF 5)

PROJ # 2002-210 | SHEET 76 | DWG E-CWS-024

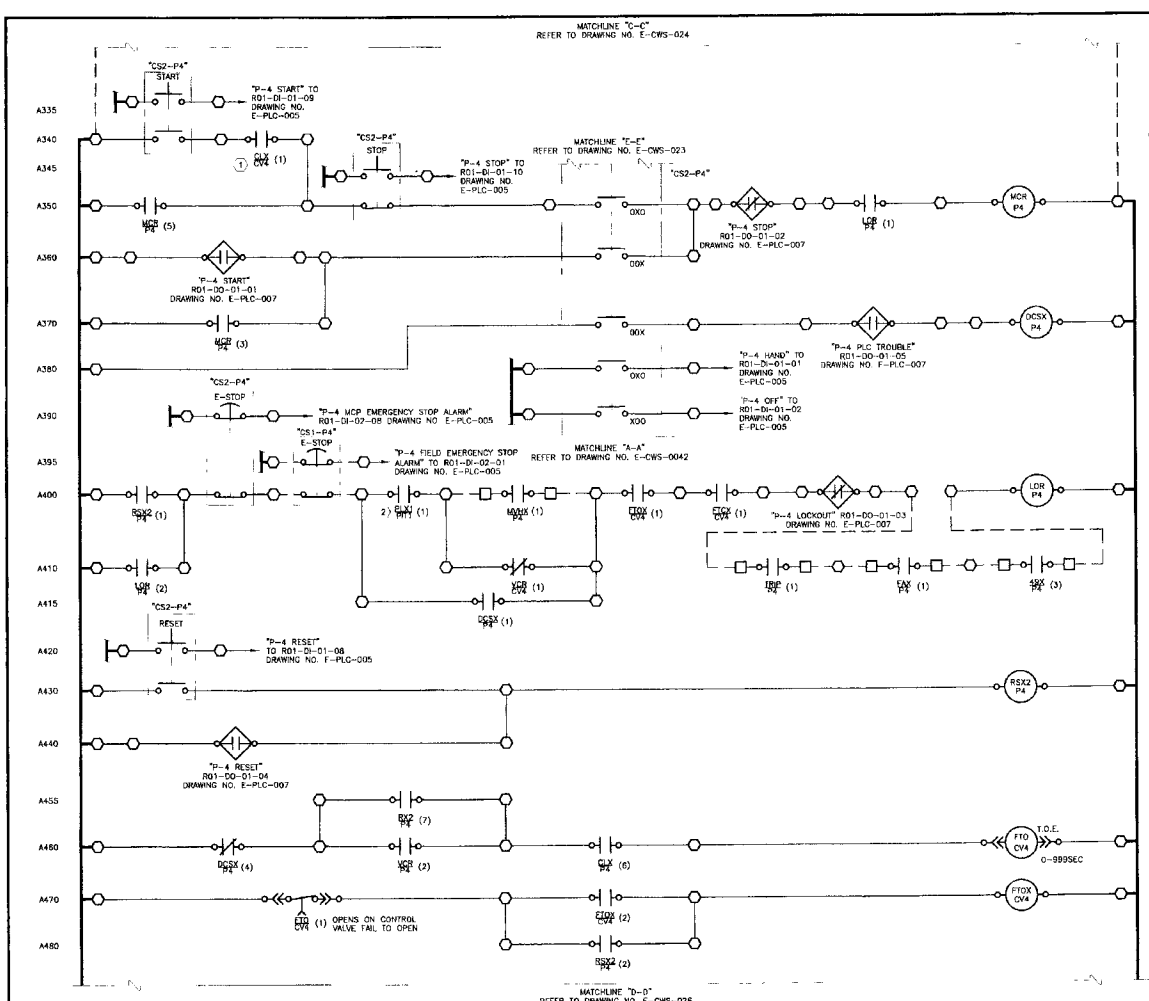

WIRING AND TERMINAL DEVICE LEGEND.

- — — INDICATES WIRING BETWEEN PANELS OR TO A FIELD MOUNTED DEVICE.
- o DEVICE WIRING TERMINAL
- □ PROPOSED TERMINAL BLOCK LOCATED IN PROPOSED 480V MOTOR CONTROL CENTER (MCC) "MCC-001A" OR "MCC-001B", AS APPLICABLE. ANY DEVICE SHOWN WITH DEVICE WIRING TERMINALS CONNECTED DIRECTLY TO THESE SYMBOLS WITH SOLID LINES IS ALSO LOCATED IN PROPOSED 480V MCC "MCC-001A" OR "MCC-001B" AS APPLICABLE.
- ⬡ PROPOSED TERMINAL BLOCK LOCATED IN PROPOSED MAIN CONTROL PANEL "MCP-001". ANY DEVICE SHOWN WITH DEVICE WIRING TERMINALS CONNECTED DIRECTLY TO THESE SYMBOLS WITH SOLID LINES IS ALSO LOCATED IN MAIN CONTROL PANEL "MCP-001"
- △ TERMINAL BLOCK LOCATED IN FIELD MOUNTED EQUIPMENT AS NOTED. ANY DEVICE SHOWN WITH DEVICE WIRING TERMINALS CONNECTED DIRECTLY TO THESE SYMBOLS WITH SOLID LINES IS ALSO LOCATED IN OR ON EQUIPMENT

KEY NOTES.

1. CONTROL VALVE 100% CLOSED AUXILIARY RELAY CONTACT REFER TO CONTROL VALVE CONTROL SCHEMATIC FOR ADDITIONAL INFORMATION.
2. SUCTION PRESSURE LOW SHUTDOWN CONTACT REFER TO GENERAL CONTROL SCHEMATICS FOR ADDITIONAL INFORMATION.

REFERENCE DRAWINGS.

- E-OL-010 – E-OL-013 – ONE-LINE DIAGRAMS
- E-CWS-057 – POWER WIRING SCHEMATIC
- E-CWS-042 – VALVE CONTROL SCHEMATIC
- E-IWS-009 – VIT INSTRUMENT WIRING SCHEMATIC
- E-PLC-001 – PLC ARCHITECTURE
- E-PLC-005 – E-PLC-007 – PLC I/O WIRING SCHEMATICS
- E-CWS-051 – E-CWS-052 – MCP ELEVATIONS

CONTROL LOGIC DEVICE DESCRIPTIONS

RUNG	DESCRIPTION
A350	MASTER CONTROL RELAY: NORMALLY DE-ENERGIZED. ENERGIZED WHEN (CLX RELAY IS ENERGIZED AND THE START PUSHBUTTON IS DEPRESSED AND THE PUMP SELECTOR SWITCH IS IN THE HAND POSITION) OR (THE PLC "START" OUTPUT IS ENERGIZED AND THE PUMP SELECTOR SWITCH IS IN THE DCS POSITION) AND THE LOR RELAY IS ENERGIZED AND THE PLC "STOP" OUTPUT IS DE-ENERGIZED.
A370	MCP DCS AUXILIARY RELAY: NORMALLY DE-ENERGIZED. ENERGIZED WHEN THE HAND-OFF-DCS SELECTOR SWITCH IS IN THE "DCS" POSITION AND THE PLC TROUBLE OUTPUT IS ENERGIZED.
A400	LOCKOUT RELAY: NORMALLY ENERGIZED. DE-ENERGIZED WHEN EITHER E-STOP IS DEPRESSED (MCP OR FIELD) OR PLC "LOCKOUT" OUTPUT ENERGIZES OR FTOX OR FTOX OR PUMP TRIP OR FAX OR 49X RELAYS ARE DE-ENERGIZED OR ((PLX1 OR (VIBRATION HIGH ALARM WHILE VALVE IS OPEN)) AND SELECTOR SWITCH IS NOT IN DCS POSITION).
A430	RESET AUXILIARY RELAY 2: NORMALLY DE-ENERGIZED. ENERGIZED WHEN "RESET" PUSHBUTTON IS DEPRESSED.
A460	VALVE FAIL TO OPEN TIMING RELAY: NORMALLY DEENERGIZED, BEGINS TIMING UPON DETECTING THAT THE PUMP SELECTOR SWITCH IS NOT IN DCS AND (THE PUMP IS RUNNING OR VCR IS ENERGIZED) AND THE VALVE IS STILL 100% CLOSED.
A470	VALVE FAIL TO OPEN AUXILIARY RELAY: NORMALLY ENERGIZED. DE-ENERGIZED WHEN FTO TIMING RELAY IS ENERGIZED OR (FTO RELAY HAS NOT BEEN ENERGIZED AND RSX2 RELAY IS DE-ENERGIZED).

BAR LENGTH 1 inch. ORIGINAL DRAWING EQUALS ONE INCH. ADJUST SCALE ACCORDINGLY

2/21/2005

HARUTUNIAN ENGINEERING INCORPORATED
ENGINEERING AND ENVIRONMENTAL CONSULTANTS
305 EAST HUNTLAND DRIVE SUITE 500
AUSTIN, TEXAS 78752

REUSE OF DOCUMENTS
This document and the ideas and designs incorporated herein as an instrument of professional service has been developed, designed and prepared by Harutunian Engineering, Inc. and is not to be used, in whole or part, for any other project without the written authorization of Water District No. 10 and Harutunian Engineering, Inc. © 2005

DESIGNED BY HEI
DRAWN BY HEI
CHECKED BY HEI
DATE FEBRUARY 2005
SCALE NONE

TRAVIS COUNTY WATER CONTROL & IMPROVEMENT DISTRICT NO. 10
PUMP STATION NO. 1

PUMP MOTOR "P-4" CONTROL SCHEMATIC
(SHEET 4 OF 5)

PROJECT NO. 2002-210 | SHEET 77 | DWG NO. E-CWS-025

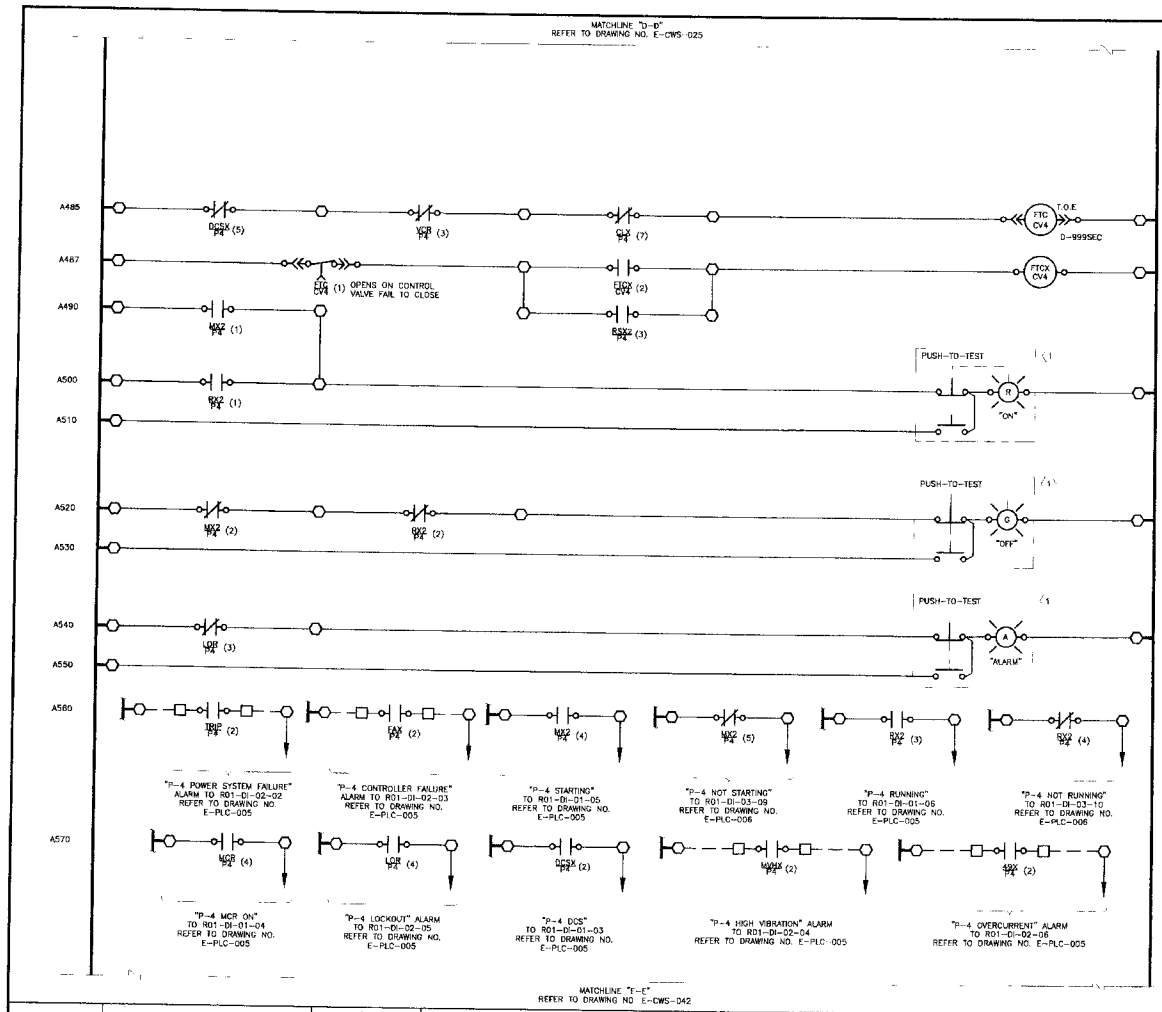

WIRING AND TERMINAL DEVICE LEGEND:

- — — INDICATES WIRING BETWEEN PANELS OR TO A FIELD MOUNTED DEVICE.
- o DEVICE WIRING TERMINAL
- □ PROPOSED TERMINAL BLOCK LOCATED IN PROPOSED 480V MOTOR CONTROL CENTER (MCC) "MCC-001A" OR "MCC-001B", AS APPLICABLE. ANY DEVICE SHOWN WITH DEVICE WIRING TERMINALS CONNECTED DIRECTLY TO THESE SYMBOLS WITH SOLID LINES IS ALSO LOCATED IN PROPOSED 480V MCC "MCC-001A" OR "MCC-001B", AS APPLICABLE.
- ⬡ PROPOSED TERMINAL BLOCK LOCATED IN PROPOSED MAIN CONTROL PANEL "MCP-001" ANY DEVICE SHOWN WITH DEVICE WIRING TERMINALS CONNECTED DIRECTLY TO THESE SYMBOLS WITH SOLID LINES IS ALSO LOCATED IN MAIN CONTROL PANEL "MCP-001"
- △ TERMINAL BLOCK LOCATED IN FIELD MOUNTED EQUIPMENT AS NOTED. ANY DEVICE SHOWN WITH DEVICE WIRING TERMINALS CONNECTED DIRECTLY TO THESE SYMBOLS WITH SOLID LINES IS ALSO LOCATED IN DR ON EQUIPMENT

KEY NOTES:

(1) INDICATING PILOT LIGHT WITH INTEGRAL MOMENTARY ACTION "PUSH-TO-TEST" PUSHBUTTON. REFER TO ELECTRICAL SPECIFICATIONS.

REFERENCE DRAWINGS:

E-OL-010 – E-OL-013 – ONE-LINE DIAGRAMS

E-PLC-001 – PLC ARCHITECTURE

E-PLC-005 – E-PLC-007 – PLC I/O WIRING SCHEMATICS

E-CWS-051 – E-CWS-052 – MCP ELEVATIONS

CONTROL LOGIC DEVICE DESCRIPTIONS

RUNG	DESCRIPTION
A485	VALVE FAIL TO CLOSE TIMING RELAY: NORMALLY DE-ENERGIZED, BEGINS TIMING UPON DETECTING THAT THE PUMP SELECTOR SWITCH IS NOT IN DCS POSITION AND VCR RELAY IS DE-ENERGIZED AND THE VALVE HAS NOT REACHED 100% CLOSED.
A487	VALVE FAIL TO CLOSE AUXILIARY RELAY: NORMALLY ENERGIZED, DE-ENERGIZES WHEN FTC RELAY HAS ENERGIZED ON VALVE FAIL TO CLOSE OR (FTC RELAY HAS NOT BEEN ENERGIZED AND RSX2 RELAY IS DE-ENERGIZED).

DARK LOCATIONS ON ORIGINAL DRAWING REQUIRE SPECIAL TREATMENT WHEN REDUCED OR ENLARGED ACCORDINGLY

2/21/2005

HARUTUNIAN ENGINEERING INCORPORATED
ENGINEERING AND ENVIRONMENTAL CONSULTANTS
305 EAST HUNTLAND DRIVE SUITE 500
AUSTIN, TEXAS 78752

REUSE OF DOCUMENTS
This document and the ideas and designs incorporated herein, as an instrument of professional service has been developed, designed and prepared by Harutunian Engineering, Inc. and is not to be used, in whole or part, for any other project without the written authorization of Water District No. 10 and Harutunian Engineering, Inc. © 2005

DRAWN BY HEI
CHKD BY HEI
APPD BY HEI
DATE FEBRUARY 2005
SCALE NONE

TRAVIS COUNTY WATER CONTROL & IMPROVEMENT DISTRICT NO. 10
PUMP STATION NO. 1

PUMP MOTOR "P-4" CONTROL SCHEMATIC (SHEET 5 OF 5)

JOB NO. 2002-210 | SHEET 78 | DWG NO. E-CWS-026

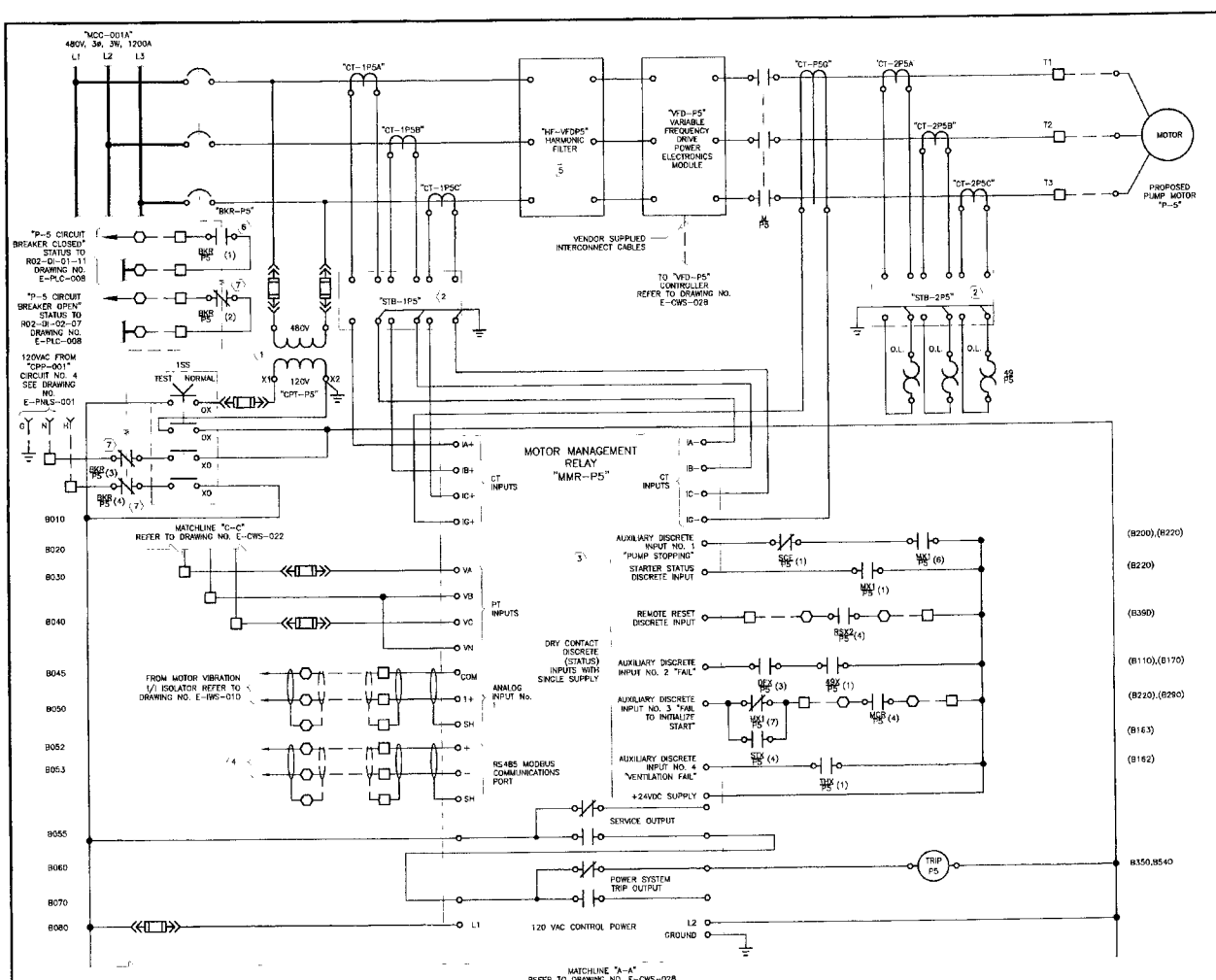

WIRING AND TERMINAL DEVICE LEGEND:

- — — INDICATES WIRING BETWEEN PANELS OR TO A FIELD MOUNTED DEVICE.
- o DEVICE WIRING TERMINAL
- □ PROPOSED TERMINAL BLOCK LOCATED IN PROPOSED 480V MOTOR CONTROL CENTER (MCC) "MCC-001A" OR "MCC-001B", AS APPLICABLE. ANY DEVICE SHOWN WITH DEVICE WIRING TERMINALS CONNECTED DIRECTLY TO THESE SYMBOLS WITH SOLID LINES IS ALSO LOCATED IN PROPOSED 480V MCC "MCC-001A" OR "MCC-001B", AS APPLICABLE.
- ⬡ PROPOSED TERMINAL BLOCK LOCATED IN PROPOSED MAIN CONTROL PANEL "MCP-001". ANY DEVICE SHOWN WITH DEVICE WIRING TERMINALS CONNECTED DIRECTLY TO THESE SYMBOLS WITH SOLID LINES IS ALSO LOCATED IN MAIN CONTROL PANEL "MCP-001"
- △ TERMINAL BLOCK LOCATED IN FIELD MOUNTED EQUIPMENT AS NOTED. ANY DEVICE SHOWN WITH DEVICE WIRING TERMINALS CONNECTED DIRECTLY TO THESE SYMBOLS WITH SOLID LINES IS ALSO LOCATED IN OR ON EQUIPMENT

KEY NOTES:

1. CONTROL POWER TRANSFORMER SHALL HAVE MINIMUM RATING OF 1500VA. TRANSFORMER SHALL BE SIZED ACCORDING TO ELECTRICAL SPECIFICATIONS.
2. FURNISH AND INSTALL THE SHORTING/TAP CHANGING TERMINAL BLOCKS (STB) IN THE METERING COMPARTMENT FOR TERMINATING THE CABLING FROM THE PROPOSED CURRENT TRANSFORMERS.
3. NOT ALL CONNECTIONS TO THE MOTOR MANAGEMENT RELAY ARE SHOWN ON THIS DRAWING. REFER TO DRAWING E-IWS-004 FOR ADDITIONAL CONNECTIONS.
4. TO/FROM RS485/232 COMMUNICATION CONVERTER LOCATED INSIDE MAIN CONTROL PANEL "MCP-001". REFER TO DRAWING NO. E-PLC-001 FOR ADDITIONAL INFORMATION.
5. REFER TO ONE-LINE DIAGRAMS AND THE SPECIFICATIONS FOR ADDITIONAL INFORMATION REGARDING HARMONIC FILTER. NOT ALL FILTER COMPONENTS ARE SHOWN HERE.
6. CONTACT OPEN WHEN ASSOCIATED CIRCUIT BREAKER IS OPEN.
7. CONTACT CLOSED WHEN ASSOCIATED CIRCUIT BREAKER IS CLOSED.

REFERENCE DRAWINGS:

E-OL-010 – E-OL-013 – ONE-LINE DIAGRAMS

E-IWS-004 – MMR WIRING SCHEMATIC

E-PLC-001 – PLC ARCHITECTURE

E-PLC-008 – E-PLC-011 – PLC I/O WIRING SCHEMATICS

E-CWS-051 – E-CWS-052 – MCP ELEVATIONS

CONTROL LOGIC DEVICE DESCRIPTIONS

RUNG	DESCRIPTION
8060	POWER SYSTEM FAILURE RELAY: NORMALLY ENERGIZED, DE-ENERGIZES WHEN MMR DETECTS A POWER SYSTEM FAILURE.

HARUTUNIAN ENGINEERING INCORPORATED
ENGINEERING AND ENVIRONMENTAL CONSULTANTS
305 EAST HUNTLAND DRIVE SUITE 509
AUSTIN, TEXAS 78752

REUSE OF DOCUMENTS
This document and the ideas and designs incorporated herein as an instrument of professional service has been developed, designed and prepared by Harutunian Engineering, Inc. and is not to be used, in whole or part, for any other project without the written authorization of Water District No. 10 and Harutunian Engineering, Inc. © 2005

DRAWN HEI
CHECKED HEI
APPROVED HEI
FEBRUARY 2005
NONE

TRAVIS COUNTY WATER CONTROL & IMPROVEMENT DISTRICT NO. 10
PUMP STATION NO. 1

PUMP MOTOR "P-5" CONTROL SCHEMATIC
(SHEET 1 OF 5)

JOB NO. 2002-210 SHEET 79 DWG NO. E-CWS-027

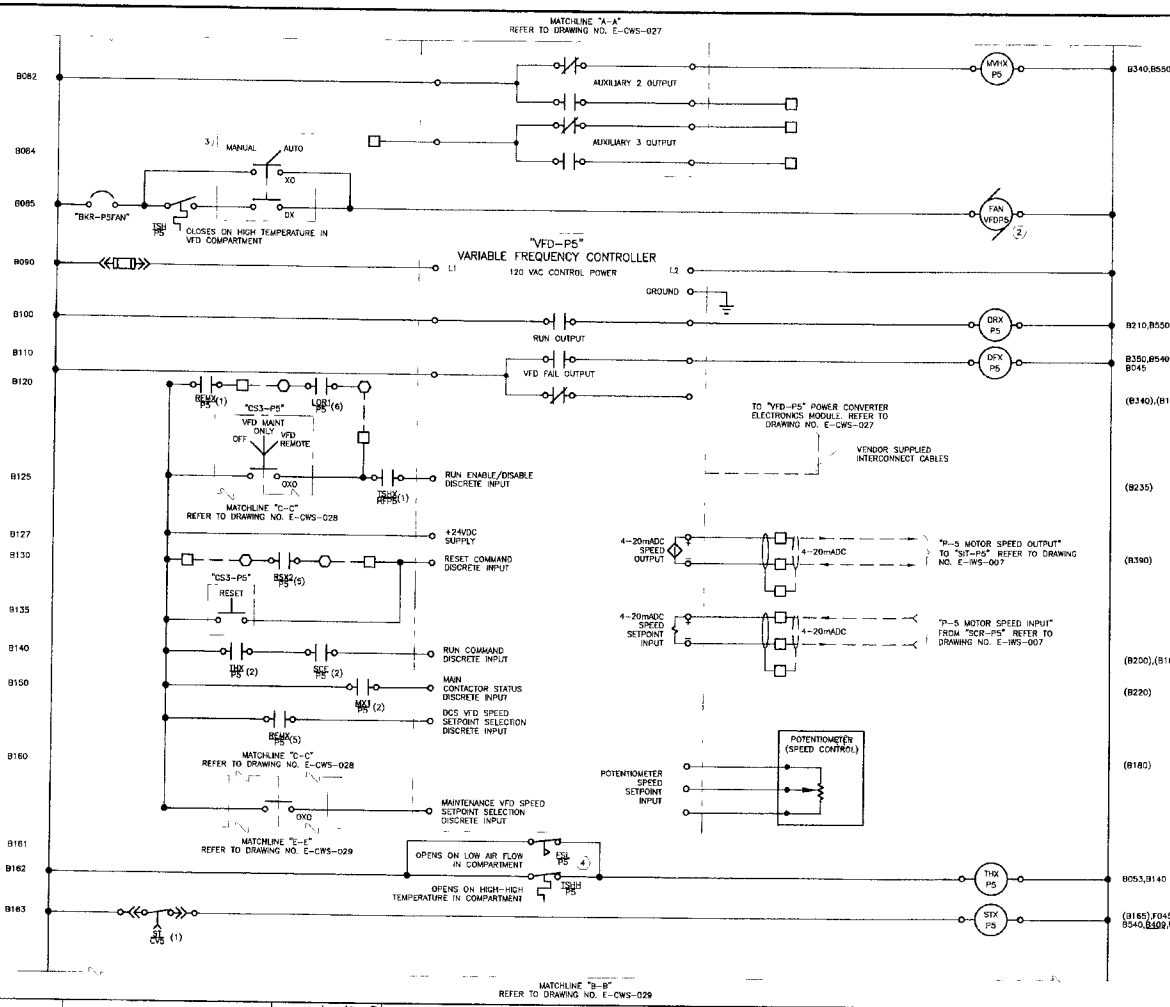

WIRING AND TERMINAL DEVICE LEGEND:

- — — INDICATES WIRING BETWEEN PANELS OR TO A FIELD MOUNTED DEVICE.
- o DEVICE WIRING TERMINAL
- □ PROPOSED TERMINAL BLOCK LOCATED IN PROPOSED 480V MOTOR CONTROL CENTER (MCC) "MCC-001A" OR "MCC-001B", AS APPLICABLE. ANY DEVICE SHOWN WITH DEVICE WIRING TERMINALS CONNECTED DIRECTLY TO THESE SYMBOLS WITH SOLID LINES IS ALSO LOCATED IN PROPOSED 480V MCC "MCC-001A" OR "MCC-001B", AS APPLICABLE
- ⬡ PROPOSED TERMINAL BLOCK LOCATED IN PROPOSED MAIN CONTROL PANEL "MCP-001" ANY DEVICE SHOWN WITH DEVICE WIRING TERMINALS CONNECTED DIRECTLY TO THESE SYMBOLS WITH SOLID LINES IS ALSO LOCATED IN MAIN CONTROL PANEL "MCP-001"
- △ TERMINAL BLOCK LOCATED IN FIELD MOUNTED EQUIPMENT AS NOTED. ANY DEVICE SHOWN WITH DEVICE WIRING TERMINALS CONNECTED DIRECTLY TO THESE SYMBOLS WITH SOLID LINES IS ALSO LOCATED IN OR ON EQUIPMENT

KEY NOTES:

1. SIZE POTENTIOMETER PER MCC MANUFACTURER'S RECOMMENDATIONS.
2. MOUNT TO FACE OF MOTOR CONTROL CENTER. ONLY ONE FAN IS SHOWN HERE FOR CLARITY. MCC MANUFACTURER TO FURNISH AND INSTALL QUANTITY OF FANS AS REQUIRED IN ACCORDANCE WITH MCC MANUFACTURER'S RECOMMENDATIONS.
3. MOUNT INSIDE OF VFD METERING AND CONTROLS COMPARTMENT OF THE MOTOR CONTROL CENTER. DO NOT MOUNT TO THE FACE OF THE MOTOR CONTROL CENTER.
4. PROPOSED AIR FLOW SWITCH DETECTS POSITIVE AIR FLOW THROUGH THE VFD STARTER COMPARTMENT OF THE MOTOR CONTROL CENTER. ALSO REFER TO THE SPECIFICATIONS FOR ADDITIONAL INFORMATION.

REFERENCE DRAWINGS:

E-OL-010 – E-OL-013 – ONE-LINE DIAGRAMS

E-PLC-001 – PLC ARCHITECTURE

E-PLC-006 – E-PLC-011 – PLC I/O WIRING SCHEMATICS

E-CWS-051 – E-CWS-052 – MCP ELEVATIONS

CONTROL LOGIC DEVICE DESCRIPTIONS

RUNG	DESCRIPTION
B082	HIGH VIBRATION AUXILIARY RELAY: NORMALLY ENERGIZED, RELAY DE-ENERGIZES ON HIGH VIBRATION
B085	VFD COMPARTMENT COOLING FAN: NORMALLY DE-ENERGIZED, FAN ENERGIZES WHEN THE SELECTOR SWITCH IS IN "AUTO" AND THE TEMPERATURE SWITCH DETECTS HIGH TEMPERATURE INSIDE THE MOTOR CONTROL CENTER VFD STARTER COMPARTMENT OR THE SELECTOR SWITCH IS IN "MANUAL"
B100	VFD RUN AUXILIARY RELAY: NORMALLY DE-ENERGIZED. ENERGIZED WHEN SCE RELAY IS ENERGIZED (VFD RUN COMMAND), AND THE VFD CONTROLLER MODULE "RUN ENABLE" INPUT HAS BEEN ENERGIZED.
B110	VFD FAIL AUXILIARY RELAY: NORMALLY ENERGIZED. DE-ENERGIZES WHEN VFD CONTROLLER MODULE DETECTS A CONTROLLER FAILURE.
B162	VFD COMPARTMENT HIGH TEMPERATURE RELAY: NORMALLY ENERGIZED. DE-ENERGIZED WHEN A HIGH TEMPERATURE IS DETECTED AND NO COOLING AIR FLOW IS DETECTED THROUGH THE VFD COMPARTMENT
B163	START TIMING AUXILIARY RELAY: NORMALLY ENERGIZED. DE-ENERGIZED WHEN THE START TIMING RELAY ENERGIZES.

BAR 1 INCH ON ORIGINAL DRAWING IF NOT 1" ADJUST SCALE ACCORDINGLY

HARUTUNIAN ENGINEERING INCORPORATED
ENGINEERING AND ENVIRONMENTAL CONSULTANTS
305 EAST HUNTLAND DRIVE SUITE 500
AUSTIN, TEXAS 78752

REUSE OF DOCUMENTS
This document and the ideas and designs incorporated herein as an instrument of professional service has been developed, designed and prepared by Harutunian Engineering, Inc. and is not to be used, in whole or part, for any other project without the written authorization of Water District No. 10 and Harutunian Engineering, Inc. © 2005

DESIGN BY HEI
DRAWN BY HEI
APPROVED BY HEI
SUBMITTED DATE FEBRUARY 2005
SCALE NONE

TRAVIS COUNTY WATER CONTROL & IMPROVEMENT DISTRICT NO. 10
PUMP STATION NO. 1

PUMP MOTOR "P-5" CONTROL SCHEMATIC (SHEET 2 OF 5)

PROJ. NO. 2002-210 | SHEET 80 | DWG. NO. E-CWS-028

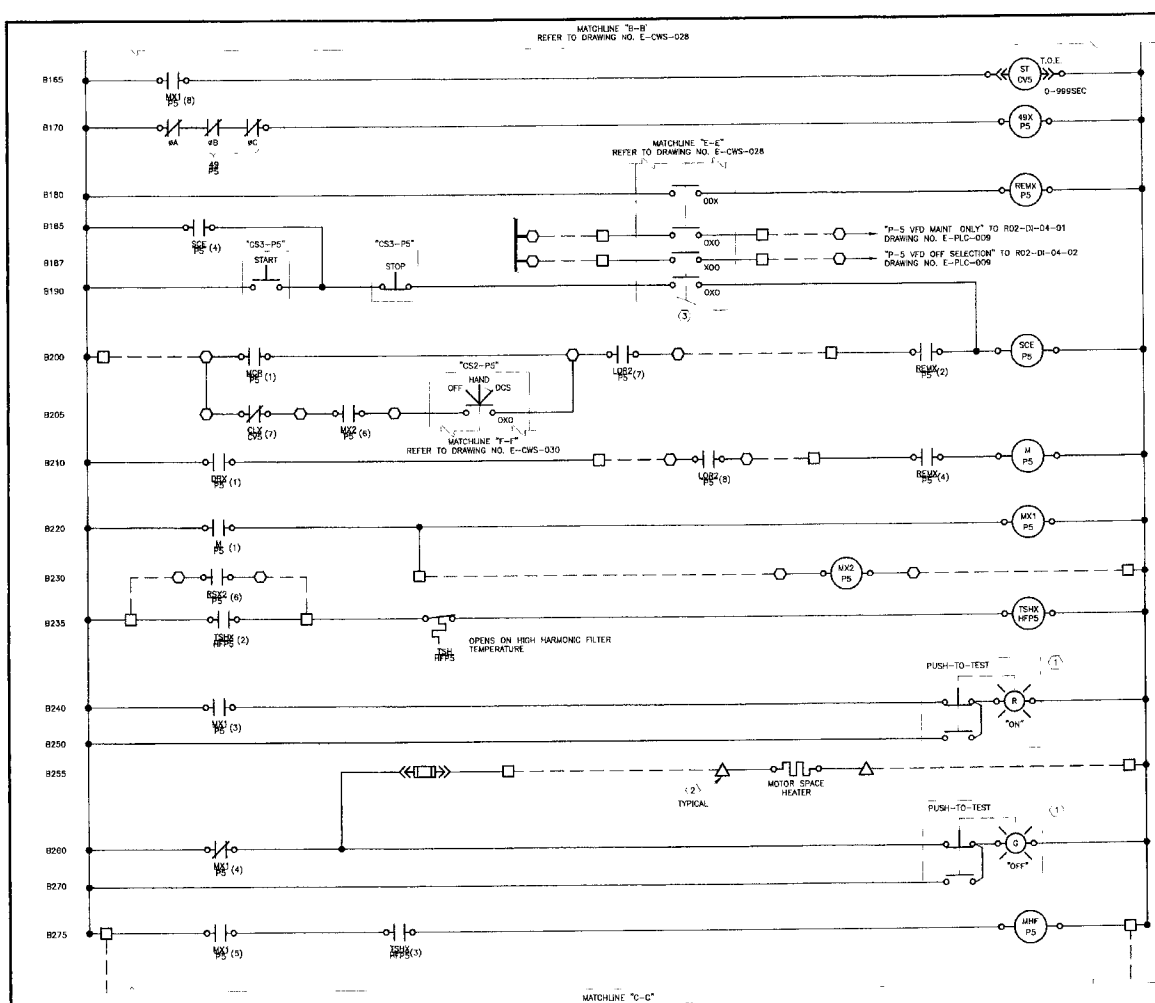

WIRING AND TERMINAL DEVICE LEGEND:

- — — INDICATES WIRING BETWEEN PANELS OR TO A FIELD MOUNTED DEVICE.
- ○ DEVICE WIRING TERMINAL.
- □ PROPOSED TERMINAL BLOCK LOCATED IN PROPOSED 480V MOTOR CONTROL CENTER (MCC) "MCC-001A" OR "MCC-001B", AS APPLICABLE. ANY DEVICE SHOWN WITH DEVICE WIRING TERMINALS CONNECTED DIRECTLY TO THESE SYMBOLS WITH SOLID LINES IS ALSO LOCATED IN PROPOSED 480V MCC "MCC-001A" OR "MCC-001B", AS APPLICABLE.
- ⬡ PROPOSED TERMINAL BLOCK LOCATED IN PROPOSED MAIN CONTROL PANEL "MCP-001" ANY DEVICE SHOWN WITH DEVICE WIRING TERMINALS CONNECTED DIRECTLY TO THESE SYMBOLS WITH SOLID LINES IS ALSO LOCATED IN MAIN CONTROL PANEL "MCP-001"
- △ TERMINAL BLOCK LOCATED IN FIELD MOUNTED EQUIPMENT AS NOTED. ANY DEVICE SHOWN WITH DEVICE WIRING TERMINALS CONNECTED DIRECTLY TO THESE SYMBOLS WITH SOLID LINES IS ALSO LOCATED IN OR ON EQUIPMENT

KEY NOTES:

1. INDICATING PILOT LIGHT WITH INTEGRAL MOMENTARY ACTION "PUSH-TO-TEST" PUSHBUTTON. REFER TO ELECTRICAL SPECIFICATIONS.
2. PROPOSED TERMINAL BLOCK IN SPACE HEATER TERMINATION BOX LOCATED ON MOTOR. REFER TO SPECIFICATIONS.
3. FURNISH AND INSTALL ADDITIONAL CONTACTS (AND IF REQUIRED, ASSOCIATED INTERPOSING RELAYS) AS REQUIRED TO FACILITATE VFD OPERATION AND MAKE ALL FINAL CONNECTIONS.

REFERENCE DRAWINGS:

E-OL-010 – E-OL-013 – ONE-LINE DIAGRAMS

E-PLC-001 – PLC ARCHITECTURE

E-PLC-008 – E-PLC-011 – PLC I/O WIRING SCHEMATICS

E-CWS-051 – E-CWS-052 – MCP ELEVATIONS

CONTROL LOGIC DEVICE DESCRIPTIONS

RUNG	DESCRIPTION
B165	START TIMING RELAY: NORMALLY DE-ENERGIZED. ENERGIZED WHEN MAIN CONTACTOR AUXILIARY RELAY IS ENERGIZED.
B170	MOTOR OVERLOAD AUXILIARY RELAY: NORMALLY ENERGIZED. DE-ENERGIZED WHEN MOTOR OVERLOAD IS DETECTED.
B180	VFD REMOTE AUXILIARY RELAY: NORMALLY DE-ENERGIZED. ENERGIZED WHEN THE OFF-LOCAL-REMOTE SELECTOR SWITCH IS IN THE "REMOTE" POSITION.
B200	STARTER CONTROL ENABLE AUXILIARY RELAY: NORMALLY DE-ENERGIZED. ENERGIZED WHEN THE LOCKOUT RELAY AND REMX RELAYS ARE ENERGIZED AND ((THE MCR RELAY IS ENERGIZED) OR WHEN (THE VALVE IS NOT FULLY CLOSED AND THE IX2 RELAY IS ENERGIZED WHILE THE SELECTOR SWITCH IS IN "HAND")) OR THE VFD SELECTOR SWITCH IS IN THE VFD MAINT ONLY POSITION AND THE "START" BUTTON ON THE VFD IS DEPRESSED.
B210	MAIN CONTACTOR COIL: NORMALLY DE-ENERGIZED. ENERGIZED WHEN THE ERX RELAY IS ENERGIZED AND THE LOR AND REMX RELAYS ARE ENERGIZED.
B220	MAIN CONTACTOR AUXILIARY RELAY 1: NORMALLY DE-ENERGIZED. ENERGIZED WHEN THE MAIN (M) CONTACTOR COIL IS ENERGIZED.
B230	MAIN CONTACTOR AUXILIARY RELAY 2: NORMALLY DE-ENERGIZED. ENERGIZED WHEN THE MAIN (M) CONTACTOR COIL IS ENERGIZED.
B235	HARMONIC FILTER HIGH TEMPERATURE RELAY: NORMALLY ENERGIZED, DE-ENERGIZES WHEN THE HARMONIC FILTER EXPERIENCES AN OVER TEMPERATURE CONDITION
B275	HARMONIC FILTER CAPACITOR ISOLATION CONTACTOR COIL: NORMALLY DE-ENERGIZED. ENERGIZED WHEN THE MAIN (M) CONTACTOR COIL AUXILIARY RELAY IS ENERGIZED AND THE HARMONIC FILTER HIGH TEMPERATURE RELAY IS ENERGIZED.

STATE OF TEXAS
REGISTERED PROFESSIONAL ENGINEER
2/21/2005

HARUTUNIAN ENGINEERING INCORPORATED
ENGINEERING AND ENVIRONMENTAL CONSULTANTS
305 EAST HUNTLAND DRIVE SUITE 500
AUSTIN, TEXAS 78752

REUSE OF DOCUMENTS
This document and the ideas and designs incorporated herein as an instrument of professional service has been developed, designed and prepared by Harutunian Engineering, Inc. and is not to be used, in whole or part, for any other project without the written authorization of Water District No. 10 and Harutunian Engineering, Inc. © 2005

HEI
HEI
HEI
FEBRUARY 2005
NONE

TRAVIS COUNTY WATER CONTROL & IMPROVEMENT DISTRICT NO 10
PUMP STATION NO 1

PUMP MOTOR "P-5" CONTROL SCHEMATIC
(SHEET 3 OF 5)

2002-210 | SHEET 81 | E-CWS-029

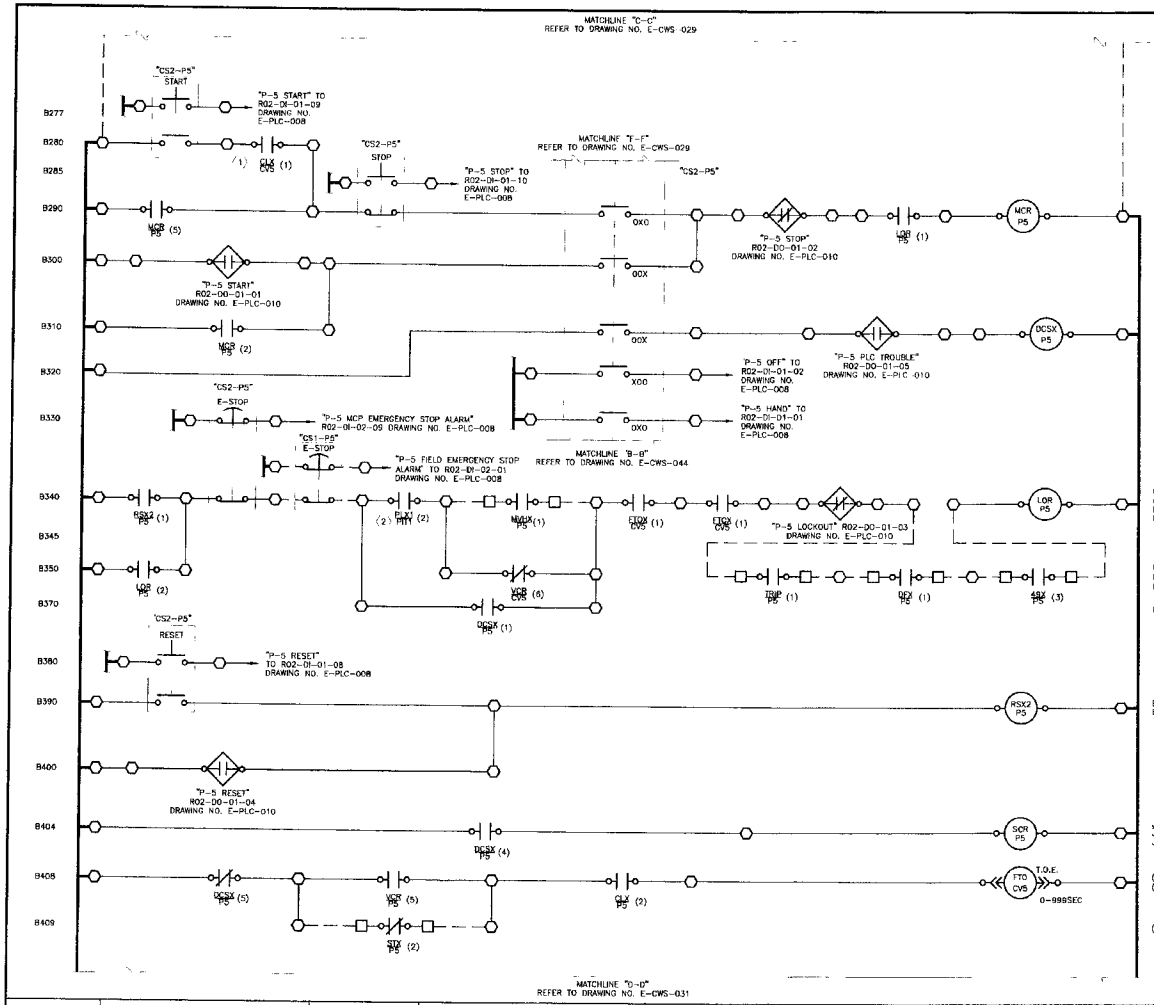

WIRING AND TERMINAL DEVICE LEGEND

- — — INDICATES WIRING BETWEEN PANELS OR TO A FIELD MOUNTED DEVICE
- ○ DEVICE WIRING TERMINAL
- □ PROPOSED TERMINAL BLOCK LOCATED IN PROPOSED 480V MOTOR CONTROL CENTER (MCC) "MCC-001A" OR "MCC-001B", AS APPLICABLE. ANY DEVICE SHOWN WITH DEVICE WIRING TERMINALS CONNECTED DIRECTLY TO THESE SYMBOLS WITH SOLID LINES IS ALSO LOCATED IN PROPOSED 480V MCC "MCC-001A" OR "MCC-001B", AS APPLICABLE.
- ⬡ PROPOSED TERMINAL BLOCK LOCATED IN PROPOSED MAIN CONTROL PANEL "MCP-001" ANY DEVICE SHOWN WITH DEVICE WIRING TERMINALS CONNECTED DIRECTLY TO THESE SYMBOLS WITH SOLID LINES IS ALSO LOCATED IN MAIN CONTROL PANEL "MCP-001"
- △ TERMINAL BLOCK LOCATED IN FIELD MOUNTED EQUIPMENT AS NOTED. ANY DEVICE SHOWN WITH DEVICE WIRING TERMINALS CONNECTED DIRECTLY TO THESE SYMBOLS WITH SOLID LINES IS ALSO LOCATED IN OR ON EQUIPMENT

KEY NOTES:

(1) CONTROL VALVE 100% CLOSED AUXILIARY RELAY CONTACT REFER TO CONTROL VALVE CONTROL SCHEMATIC FOR ADDITIONAL INFORMATION.

(2) SUCTION PRESSURE LOW SHUTDOWN CONTACT REFER TO GENERAL CONTROL SCHEMATICS FOR ADDITIONAL INFORMATION.

REFERENCE DRAWINGS:

E-OL-010 – E-OL-013 – ONE-LINE DIAGRAMS

E-CWS-057 – INSTRUMENT POWER WIRING SCHEMATICS

E-CWS-044 – E-CWS-045 – VALVE CONTROL SCHEMATIC

E-PLC-001 – PLC ARCHITECTURE

E-PLC-008 – E-PLC-011 – PLC I/O WIRING SCHEMATICS

E-CWS-051 – E-CWS-052 – MCP ELEVATIONS

CONTROL LOGIC DEVICE DESCRIPTIONS

RUNG	DESCRIPTION
B290	MASTER CONTROL RELAY: NORMALLY DE-ENERGIZED. ENERGIZED WHEN (CLX RELAY IS ENERGIZED AND THE START PUSHBUTTON IS DEPRESSED AND THE PUMP SELECTOR SWITCH IS IN THE HAND POSITION) OR (THE PLC "START" OUTPUT IS ENERGIZED AND THE PUMP SELECTOR SWITCH IS IN THE DCS POSITION) AND THE LOR RELAY IS ENERGIZED AND THE PLC "STOP" OUTPUT IS DE-ENERGIZED.
B310	MCP DCS AUXILIARY RELAY: NORMALLY DE-ENERGIZED. ENERGIZED WHEN THE HAND-OFF-DCS SELECTOR SWITCH IS IN THE "DCS" POSITION AND THE PLC TROUBLE OUTPUT IS ENERGIZED.
B340	LOCKOUT RELAY: NORMALLY ENERGIZED. DE-ENERGIZED WHEN EITHER E-STOP IS DEPRESSED (MCP OR FIELD) OR PLC "LOCKOUT" OUTPUT ENERGIZES OR FTOX OR FTOX OR PUMP TRIP OR FAX OR 49X RELAYS ARE DE-ENERGIZED OR ((PLX1 OR (VIBRATION HIGH ALARM WHILE VALVE IS OPEN)) AND SELECTOR SWITCH IS NOT IN DCS POSITION).
B390	RESET AUXILIARY RELAY 2: NORMALLY DE-ENERGIZED. ENERGIZED WHEN "RESET" PUSHBUTTON IS DEPRESSED OR PLC RESET OUTPUT IS ENERGIZED.
B404	SPEED CONTROL SELECTION RELAY: NORMALLY ENERGIZED, DE-ENERGIZES WHEN THE DCSX RELAY IS DEENERGIZED.
B408	VALVE FAIL TO OPEN TIMING RELAY: NORMALLY ENERGIZED, BEGINS TIMING UPON DETECTING THAT THE VALVE CONTROL RELAY IS ENERGIZED AND THE VALVE IS STILL 100% CLOSED.

BAR MEASURES 1" ON ORIGINAL DRAWING. IF NOT EQUAL, ADJUST SCALE ACCORDINGLY

STATE OF TEXAS — K. Harutunian — 2/21/2005

HARUTUNIAN ENGINEERING INCORPORATED
ENGINEERING AND ENVIRONMENTAL CONSULTANTS
305 EAST HUNTLAND DRIVE SUITE 500
AUSTIN, TEXAS 78752

REUSE OF DOCUMENTS
This document and the ideas and designs incorporated herein as an instrument of professional service has been developed, designed and prepared by Harutunian Engineering, Inc. and is not to be used, in whole or part, for any other project without the written authorization of Water District No. 10 and Harutunian Engineering, Inc. © 2005

HEI
HEI
HEI
FEBRUARY 2005
NONE

TRAVIS COUNTY WATER CONTROL & IMPROVEMENT DISTRICT NO 10
PUMP STATION NO 1

PUMP MOTOR "P-5" CONTROL SCHEMATIC
(SHEET 4 OF 5)

2002-210 | SHEET 82 | E-CWS-030

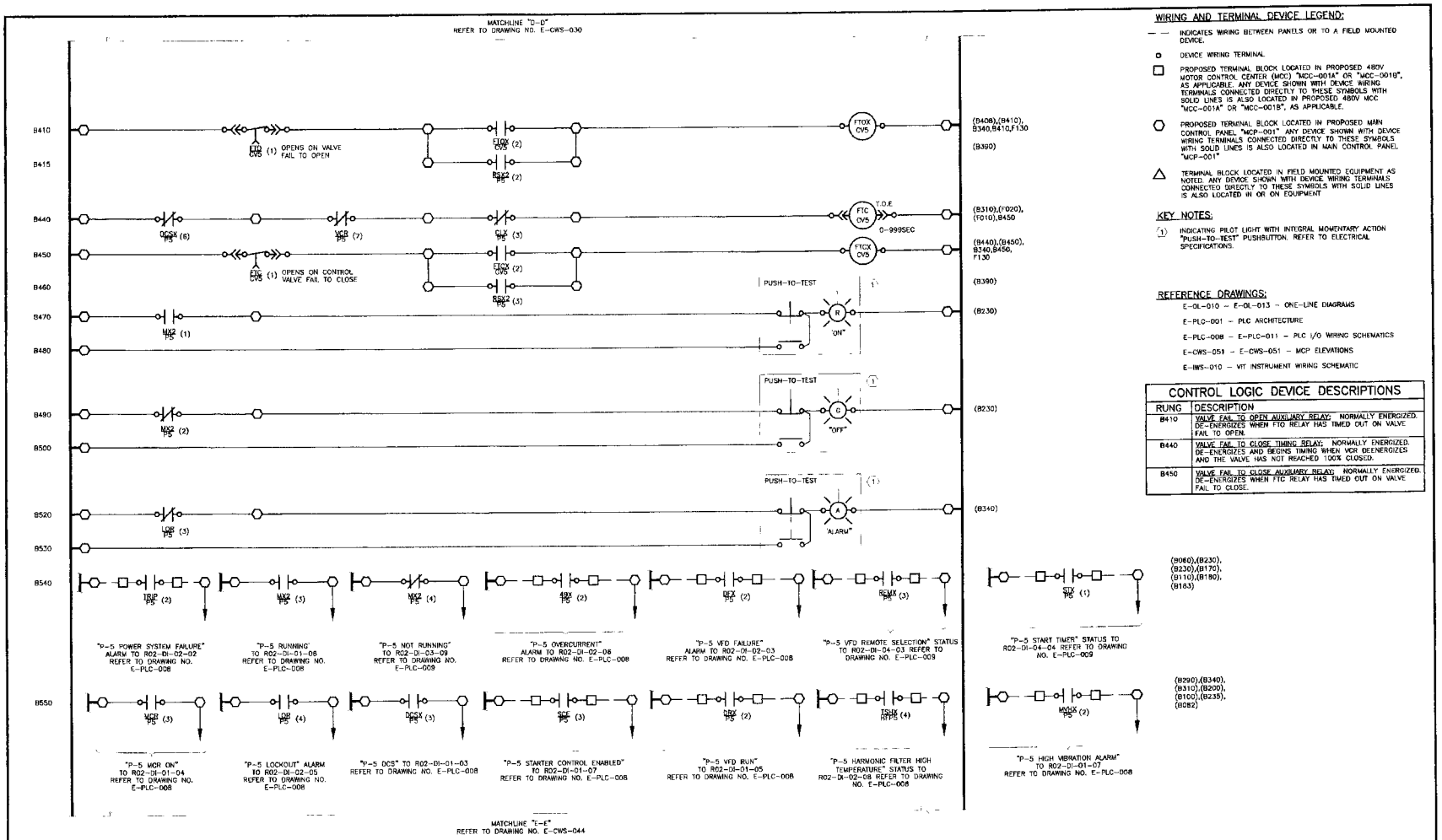

WIRING AND TERMINAL DEVICE LEGEND:

- — — INDICATES WIRING BETWEEN PANELS OR TO A FIELD MOUNTED DEVICE.
- o DEVICE WIRING TERMINAL.
- □ PROPOSED TERMINAL BLOCK LOCATED IN PROPOSED 480V MOTOR CONTROL CENTER (MCC) "MCC-001A" OR "MCC-001B", AS APPLICABLE. ANY DEVICE SHOWN WITH DEVICE WIRING TERMINALS CONNECTED DIRECTLY TO THESE SYMBOLS WITH SOLID LINES IS ALSO LOCATED IN PROPOSED 480V MCC "MCC-001A" OR "MCC-001B", AS APPLICABLE.
- ⬡ PROPOSED TERMINAL BLOCK LOCATED IN PROPOSED MAIN CONTROL PANEL "MCP-001" ANY DEVICE SHOWN WITH DEVICE WIRING TERMINALS CONNECTED DIRECTLY TO THESE SYMBOLS WITH SOLID LINES IS ALSO LOCATED IN MAIN CONTROL PANEL "MCP-001"
- △ TERMINAL BLOCK LOCATED IN FIELD MOUNTED EQUIPMENT AS NOTED. ANY DEVICE SHOWN WITH DEVICE WIRING TERMINALS CONNECTED DIRECTLY TO THESE SYMBOLS WITH SOLID LINES IS ALSO LOCATED IN OR ON EQUIPMENT

KEY NOTES:

(1) INDICATING PILOT LIGHT WITH INTEGRAL MOMENTARY ACTION "PUSH-TO-TEST" PUSHBUTTON. REFER TO ELECTRICAL SPECIFICATIONS.

REFERENCE DRAWINGS:

E-OL-010 – E-OL-013 – ONE-LINE DIAGRAMS
E-PLC-001 – PLC ARCHITECTURE
E-PLC-008 – E-PLC-011 – PLC I/O WIRING SCHEMATICS
E-CWS-051 – E-CWS-051 – MCP ELEVATIONS
E-IWS-010 – VIT INSTRUMENT WIRING SCHEMATIC

CONTROL LOGIC DEVICE DESCRIPTIONS

RUNG	DESCRIPTION
B410	VALVE FAIL TO OPEN AUXILIARY RELAY: NORMALLY ENERGIZED. DE-ENERGIZES WHEN FTO RELAY HAS TIMED OUT ON VALVE FAIL TO OPEN.
B440	VALVE FAIL TO CLOSE TIMING RELAY: NORMALLY ENERGIZED. DE-ENERGIZES AND BEGINS TIMING WHEN VCR DEENERGIZES AND THE VALVE HAS NOT REACHED 100% CLOSED.
B450	VALVE FAIL TO CLOSE AUXILIARY RELAY: NORMALLY ENERGIZED. DE-ENERGIZES WHEN FTC RELAY HAS TIMED OUT ON VALVE FAIL TO CLOSE.

BAR LENGTH ON ORIGINAL DRAWING EQUAL ONE INCH ALTER ACCORDINGLY

2/21/2005

HARUTUNIAN ENGINEERING INCORPORATED
ENGINEERING AND ENVIRONMENTAL CONSULTANTS
305 EAST HUNTLAND DRIVE SUITE 500
AUSTIN, TEXAS 78752

REUSE OF DOCUMENTS
This document and the ideas and designs incorporated herein as an instrument of professional service has been developed, designed and prepared by Harutunian Engineering, Inc. and is not to be used, in whole or part, for any other project without the written authorization of Water District No. 10 and Harutunian Engineering, Inc. © 2005

HEI
HEI
HEI
FEBRUARY 2005
NONE

TRAVIS COUNTY WATER CONTROL & IMPROVEMENT DISTRICT NO 10
PUMP STATION NO. 1

PUMP MOTOR "P-5" CONTROL SCHEMATIC
(SHEET 5 OF 5)

2002-210 | SHEET 83 | E-CWS-031

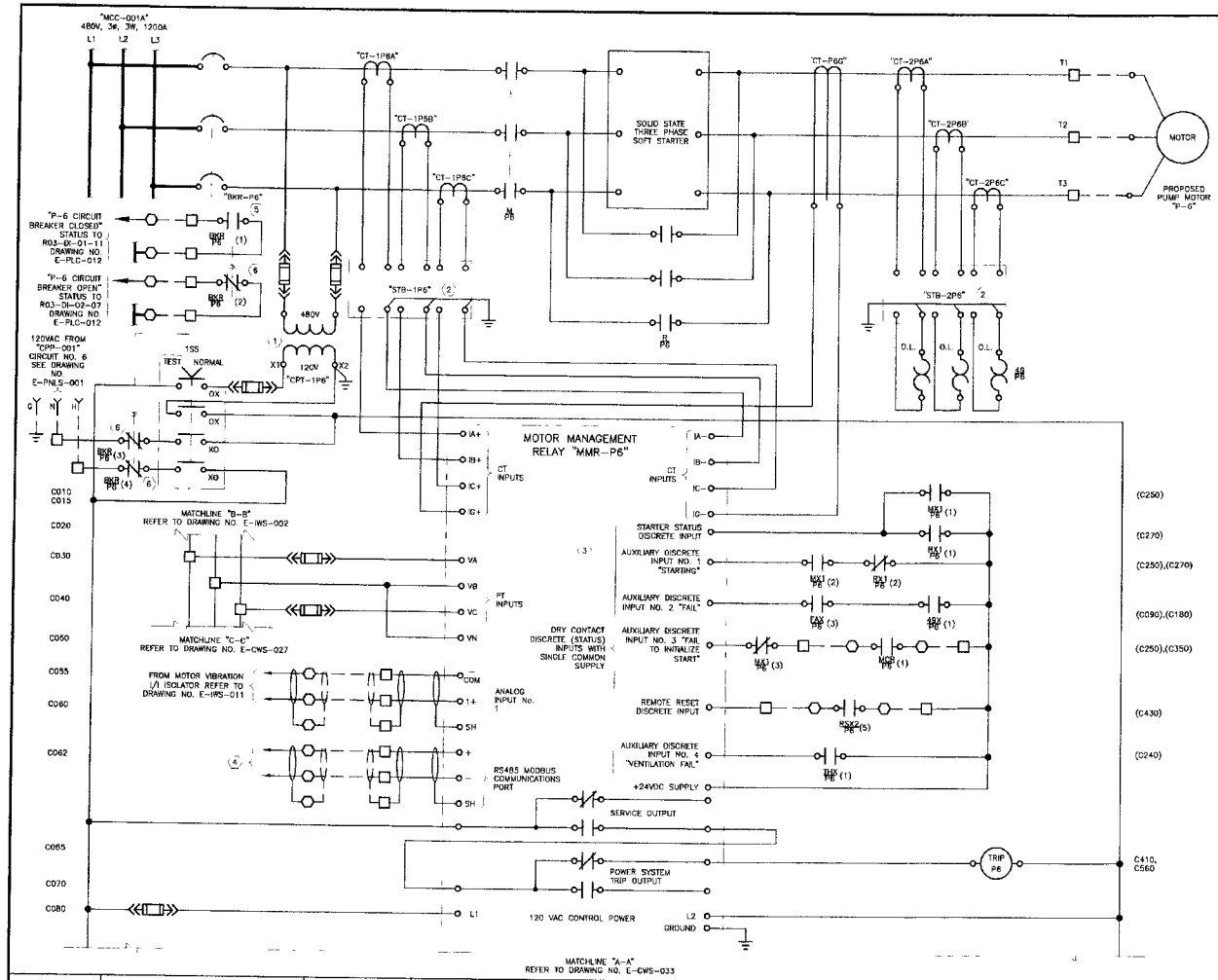

WIRING AND TERMINAL DEVICE LEGEND:

- — — INDICATES WIRING BETWEEN PANELS OR TO A FIELD MOUNTED DEVICE.
- ○ DEVICE WIRING TERMINAL
- □ PROPOSED TERMINAL BLOCK LOCATED IN PROPOSED 480V MOTOR CONTROL CENTER (MCC) "MCC-001A" OR "MCC-001B", AS APPLICABLE. ANY DEVICE SHOWN WITH DEVICE WIRING TERMINALS CONNECTED DIRECTLY TO THESE SYMBOLS WITH SOLID LINES IS ALSO LOCATED IN PROPOSED 480V MCC "MCC-001A" OR "MCC-001B", AS APPLICABLE.
- ⬡ PROPOSED TERMINAL BLOCK LOCATED IN PROPOSED MAIN CONTROL PANEL "MCP-001" ANY DEVICE SHOWN WITH DEVICE WIRING TERMINALS CONNECTED DIRECTLY TO THESE SYMBOLS WITH SOLID LINES IS ALSO LOCATED IN MAIN CONTROL PANEL "MCP-001"
- △ TERMINAL BLOCK LOCATED IN FIELD MOUNTED EQUIPMENT AS NOTED. ANY DEVICE SHOWN WITH DEVICE WIRING TERMINALS CONNECTED DIRECTLY TO THESE SYMBOLS WITH SOLID LINES IS ALSO LOCATED IN OR ON EQUIPMENT

KEY NOTES:

1. CONTROL POWER TRANSFORMER SHALL HAVE MINIMUM RATING OF 1500VA. TRANSFORMER SHALL BE SIZED ACCORDING TO ELECTRICAL SPECIFICATIONS.
2. FURNISH AND INSTALL THE SHORTING/TAP CHANGING TERMINAL BLOCKS (STB) IN THE METERING COMPARTMENT FOR TERMINATING THE CABLING FROM THE PROPOSED CURRENT TRANSFORMERS.
3. NOT ALL CONNECTIONS TO THE MOTOR MANAGEMENT RELAY ARE SHOWN ON THIS DRAWING. REFER TO DRAWING E-IWS-005 FOR ADDITIONAL CONNECTIONS.
4. TO/FROM RS485/232 COMMUNICATION CONVERTER LOCATED INSIDE MAIN CONTROL PANEL "MCP-001" REFER TO DRAWING NO. E-PLC-001 FOR ADDITIONAL INFORMATION.
5. CONTACT OPEN WHEN ASSOCIATED CIRCUIT BREAKER IS OPEN.
6. CONTACT CLOSED WHEN ASSOCIATED CIRCUIT BREAKER IS CLOSED.

REFERENCE DRAWINGS:

E-OL-010 – E-OL-013 – ONE-LINE DIAGRAMS
E-IWS-005 – MMR WIRING SCHEMATIC
E-PLC-001 – PLC ARCHITECTURE
E-PLC-012 – E-PLC-014 – PLC I/O WIRING SCHEMATICS
E-CWS-051 – E-CWS-052 – MCP ELEVATIONS

CONTROL LOGIC DEVICE DESCRIPTIONS	
RUNG	DESCRIPTION
C065	POWER SYSTEM FAILURE RELAY: NORMALLY ENERGIZED. DE-ENERGIZES WHEN MMR DETECTS A POWER SYSTEM FAILURE.

BAR LENGTH ON ORIGINAL DRAWING EQUALS ONE INCH. ADJUST FOR SCALE ACCORDINGLY

8/21/2005

HARUTUNIAN ENGINEERING INCORPORATED
ENGINEERING AND ENVIRONMENTAL CONSULTANTS
305 EAST HUNTLAND DRIVE SUITE 500
AUSTIN, TEXAS 78752

REUSE OF DOCUMENTS
This document and the ideas and designs incorporated herein as an instrument of professional service has been developed, designed and prepared by Harutunian Engineering, Inc. and is not to be used, in whole or part, for any other project without the written authorization of Water District No. 10 and Harutunian Engineering, Inc. © 2005

HEI
HEI
HEI
FEBRUARY 2005
NONE

TRAVIS COUNTY WATER CONTROL & IMPROVEMENT DISTRICT NO. 10
PUMP STATION NO. 1

PUMP MOTOR "P-6" CONTROL SCHEMATIC
(SHEET 1 OF 5)

2002-210 | SHEET 84 | E-CWS-032

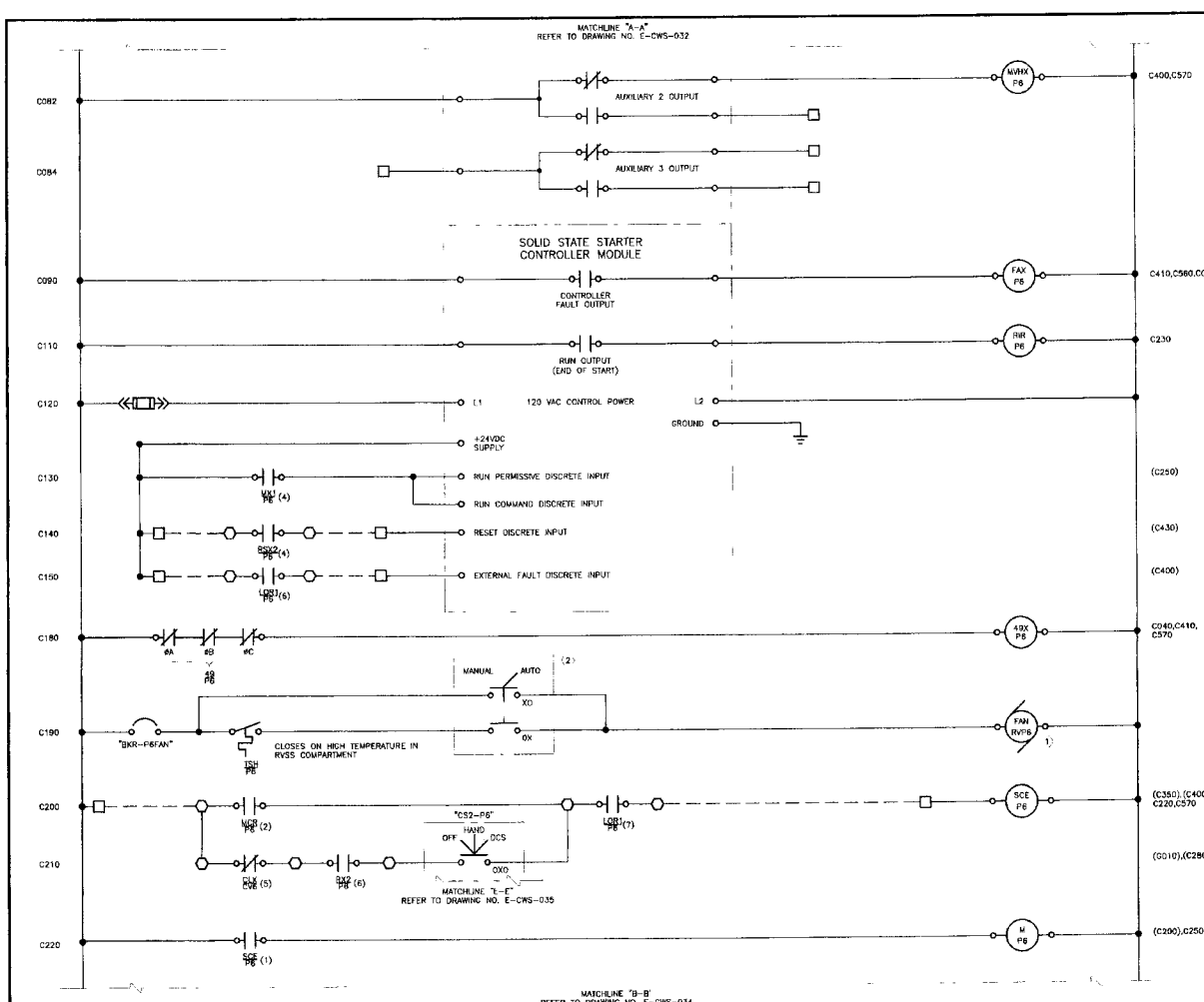

WIRING AND TERMINAL DEVICE LEGEND:

— — INDICATES WIRING BETWEEN PANELS OR TO A FIELD MOUNTED DEVICE.

o DEVICE WIRING TERMINAL

□ PROPOSED TERMINAL BLOCK LOCATED IN PROPOSED 480V MOTOR CONTROL CENTER (MCC) "MCC-001A" OR "MCC-001B", AS APPLICABLE. ANY DEVICE SHOWN WITH DEVICE WIRING TERMINALS CONNECTED DIRECTLY TO THESE SYMBOLS WITH SOLID LINES IS ALSO LOCATED IN PROPOSED 480V MCC "MCC-001A" OR "MCC-001B" AS APPLICABLE.

⬡ PROPOSED TERMINAL BLOCK LOCATED IN PROPOSED MAIN CONTROL PANEL "MCP-001". ANY DEVICE SHOWN WITH DEVICE WIRING TERMINALS CONNECTED DIRECTLY TO THESE SYMBOLS WITH SOLID LINES IS ALSO LOCATED IN MAIN CONTROL PANEL "MCP-001"

△ TERMINAL BLOCK LOCATED IN FIELD MOUNTED EQUIPMENT AS NOTED. ANY DEVICE SHOWN WITH DEVICE WIRING TERMINALS CONNECTED DIRECTLY TO THESE SYMBOLS WITH SOLID LINES IS ALSO LOCATED IN OR ON EQUIPMENT

KEY NOTES:

(1) MOUNT TO FACE OF MOTOR CONTROL CENTER. ONLY ONE FAN IS SHOWN HERE FOR CLARITY. MCC MANUFACTURER TO FURNISH AND INSTALL QUANTITY OF FANS AS REQUIRED IN ACCORDANCE WITH MCC MANUFACTURER'S RECOMMENDATIONS.

(2) MOUNT INSIDE OF RVSS METERING AND CONTROLS COMPARTMENT OF THE MOTOR CONTROL CENTER. DO NOT MOUNT TO THE FACE OF THE MOTOR CONTROL CENTER.

REFERENCE DRAWINGS:

E-OL-010 – E-OL-013 – ONE-LINE DIAGRAMS

E-PLC-001 – PLC ARCHITECTURE

E-PLC-012 – E-PLC-014 – PLC I/O WIRING SCHEMATICS

E-CWS-051 – E-CWS-052 – MCP ELEVATIONS

CONTROL LOGIC DEVICE DESCRIPTIONS

RUNG	DESCRIPTION
C082	MOTOR HIGH VIBRATION AUXILIARY RELAY: NORMALLY ENERGIZED. DE-ENERGIZES WHEN MOTOR MANAGEMENT RELAY DETECTS HIGH MOTOR VIBRATION.
C090	CONTROLLER FAILURE AUXILIARY RELAY: NORMALLY ENERGIZED. DE-ENERGIZES WHEN SOFT STARTER CONTROLLER MODULE DETECTS A FAULT
C110	RUN INTERFACE AUXILIARY RELAY: NORMALLY DE-ENERGIZED. ENERGIZED WHEN THE MOTOR IS RUNNING AT FULL SPEED AND VOLTAGE.
C180	OVERLOAD AUXILIARY RELAY: NORMALLY ENERGIZED. RELAY DE-ENERGIZES ON MOTOR OVERLOAD.
C190	RVSS STARTER COMPARTMENT COOLING FAN: NORMALLY DE-ENERGIZED. FAN ENERGIZES WHEN THE SELECTOR SWITCH IS IN "AUTO" AND THE TEMPERATURE SWITCH DETECTS HIGH TEMPERATURE INSIDE THE MOTOR CONTROL CENTER RVSS STARTER COMPARTMENT, OR THE SELECTOR SWITCH IS IN "MANUAL".
C200	STARTER CONTROL ENABLE AUXILIARY RELAY: NORMALLY DE-ENERGIZED. ENERGIZED WHEN THE LOCKOUT RELAY IS ENERGIZED AND (THE MCR RELAY IS ENERGIZED) OR WHEN (THE VALVE IS NOT FULLY CLOSED AND THE RX2 RELAY IS ENERGIZED WHILE THE SELECTOR SWITCH IS IN "HAND").
C220	MAIN CONTACTOR COIL: NORMALLY DE-ENERGIZED. ENERGIZED WHEN THE SCE RELAY IS ENERGIZED.

BAR FITS ON ORIGINAL DRAWING. LEGEND ONE INCH. ADJUST SCALE AS REQUIRED

2/21/2005

HARUTUNIAN ENGINEERING INCORPORATED
ENGINEERING AND ENVIRONMENTAL CONSULTANTS
305 EAST HUNTLAND DRIVE SUITE 500
AUSTIN, TEXAS 78752

REUSE OF DOCUMENTS
This document and the ideas and designs incorporated herein as an instrument of professional service has been developed, designed and prepared by Harutunian Engineering, Inc. and is not to be used, in whole or part, for any other project without the written authorization of Water District No. 10 and Harutunian Engineering, Inc. © 2005

DESIGNED BY HEI
CHECKED BY HEI
FEBRUARY 2005
SCALE NONE

TRAVIS COUNTY WATER CONTROL & IMPROVEMENT DISTRICT NO. 10
PUMP STATION NO. 1

PUMP MOTOR "P-6" CONTROL SCHEMATIC
(SHEET 2 OF 5)

JOB NO. 2002-210 SHEET 85 DWG. NO. E-CWS-033

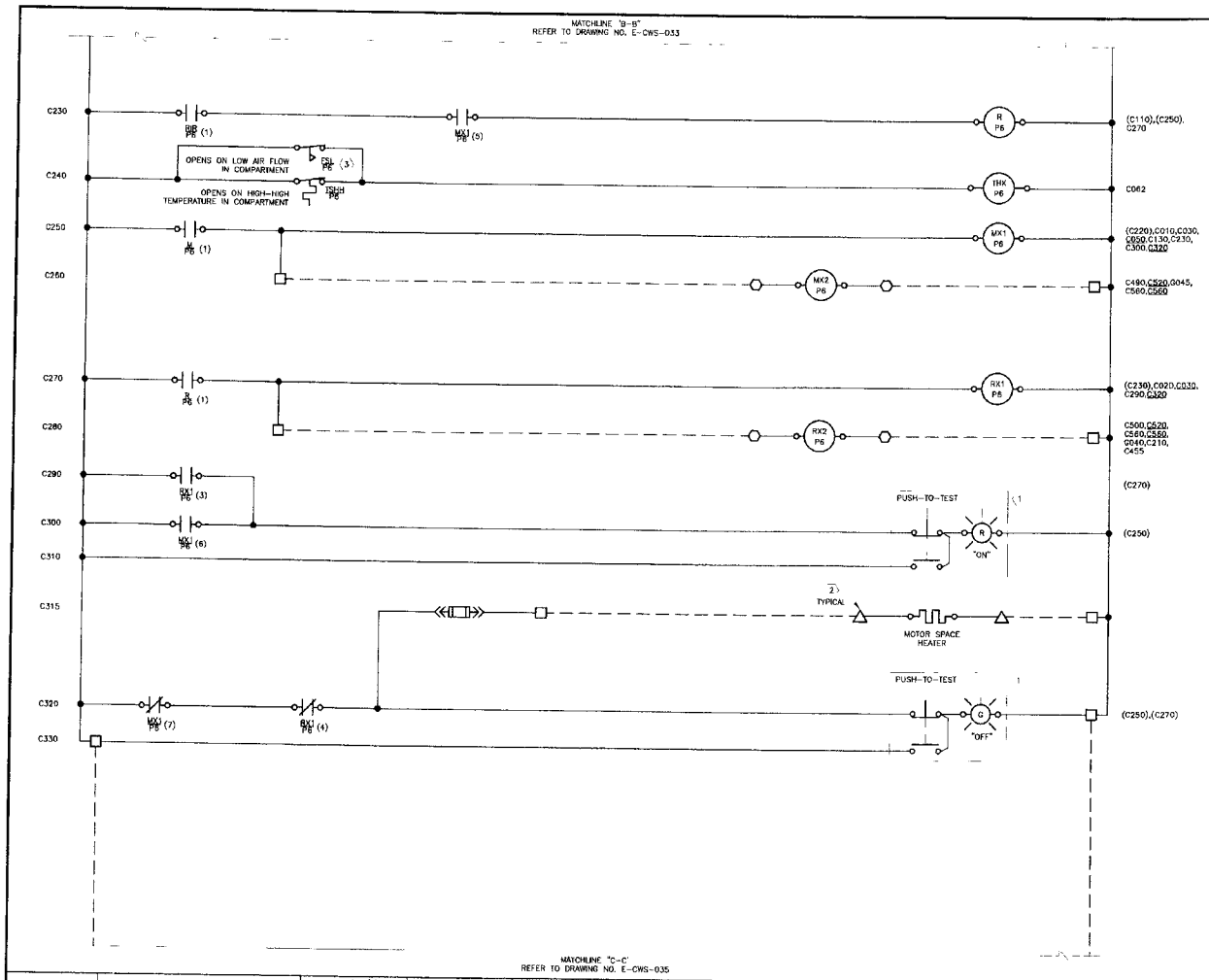

WIRING AND TERMINAL DEVICE LEGEND:

- — — INDICATES WIRING BETWEEN PANELS OR TO A FIELD MOUNTED DEVICE.
- o DEVICE WIRING TERMINAL
- □ PROPOSED TERMINAL BLOCK LOCATED IN PROPOSED 480V MOTOR CONTROL CENTER (MCC) "MCC-001A" OR "MCC-001B", AS APPLICABLE. ANY DEVICE SHOWN WITH DEVICE WIRING TERMINALS CONNECTED DIRECTLY TO THESE SYMBOLS WITH SOLID LINES IS ALSO LOCATED IN PROPOSED 480V MCC "MCC-001A" OR "MCC-001B", AS APPLICABLE.
- ⬡ PROPOSED TERMINAL BLOCK LOCATED IN PROPOSED MAIN CONTROL PANEL "MCP-001" ANY DEVICE SHOWN WITH DEVICE WIRING TERMINALS CONNECTED DIRECTLY TO THESE SYMBOLS WITH SOLID LINES IS ALSO LOCATED IN MAIN CONTROL PANEL "MCP-001"
- △ TERMINAL BLOCK LOCATED IN FIELD MOUNTED EQUIPMENT AS NOTED. ANY DEVICE SHOWN WITH DEVICE WIRING TERMINALS CONNECTED DIRECTLY TO THESE SYMBOLS WITH SOLID LINES IS ALSO LOCATED IN OR ON EQUIPMENT

KEY NOTES.

1. INDICATING PILOT LIGHT WITH INTEGRAL MOMENTARY ACTION "PUSH-TO-TEST" PUSHBUTTON. REFER TO ELECTRICAL SPECIFICATIONS.
2. PROPOSED TERMINAL BLOCK LOCATED IN SPACE HEATER TERMINATION BOX LOCATED ON MOTOR.
3. PROPOSED AIR FLOW SWITCH DETECTS POSITIVE AIR FLOW THROUGH THE RVSS STARTER COMPARTMENT OF THE MOTOR CONTROL CENTER. ALSO REFER TO THE SPECIFICTIONS FOR ADDITIONAL INFORMATION.

REFERENCE DRAWINGS.

E-OL-010 – E-OL-013 – ONE-LINE DIAGRAMS

E-PLC-001 – PLC ARCHITECTURE

E-PLC-012 – E-PLC-014 – PLC I/O WIRING SCHEMATICS

E-CWS-051 – E-CWS-052 – MCP ELEVATIONS

CONTROL LOGIC DEVICE DESCRIPTIONS

RUNG	DESCRIPTION
C230	RUN CONTACTOR COIL. NORMALLY DE-ENERGIZED. ENERGIZED WHEN THE RIR AND MX1 RELAYS ARE ENERGIZED.
C240	RVSS COMPARTMENT HIGH TEMPERATURE RELAY. NORMALLY ENERGIZED. DEENERGIZED WHEN A HIGH TEMPERATURE IS DETECTED AND NO COOLING AIR FLOW IS DETECTED THROUGH THE RVSS COMPARTMENT
C250	MAIN CONTACTOR AUXILIARY RELAY 1. NORMALLY DE-ENERGIZED. ENERGIZED WHEN THE MAIN (M) CONTACTOR COIL IS ENERGIZED.
C260	MAIN CONTACTOR AUXILIARY RELAY 2. NORMALLY DE-ENERGIZED. ENERGIZED WHEN THE MAIN (M) CONTACTOR COIL IS ENERGIZED.
C270	RUN CONTACTOR AUXILIARY RELAY 1. NORMALLY DE-ENERGIZED. ENERGIZED WHEN THE RUN (R) CONTACTOR COIL IS ENERGIZED.
C280	RUN CONTACTOR AUXILIARY RELAY 2. NORMALLY DE-ENERGIZED. ENERGIZED WHEN THE RUN (R) CONTACTOR COIL IS ENERGIZED.

2/21/2005

HARUTUNIAN ENGINEERING INCORPORATED
ENGINEERING AND ENVIRONMENTAL CONSULTANTS
305 EAST HUNTLAND DRIVE SUITE 500
AUSTIN, TEXAS 78752

REUSE OF DOCUMENTS
This document and the ideas and designs incorporated herein as an instrument of professional service has been developed, designed and prepared by Harutunian Engineering, Inc. and is not to be used, in whole or part, for any other project without the written authorization of Water District No. 10 and Harutunian Engineering, Inc. © 2005

HEI
HEI
HEI
FEBRUARY 2005
NONE

TRAVIS COUNTY WATER CONTROL & IMPROVEMENT DISTRICT NO 10
PUMP STATION NO 1

PUMP MOTOR "P-6" CONTROL SCHEMATIC
(SHEET 3 OF 5)

2002-210 | SHEET 86 | E-CWS-034

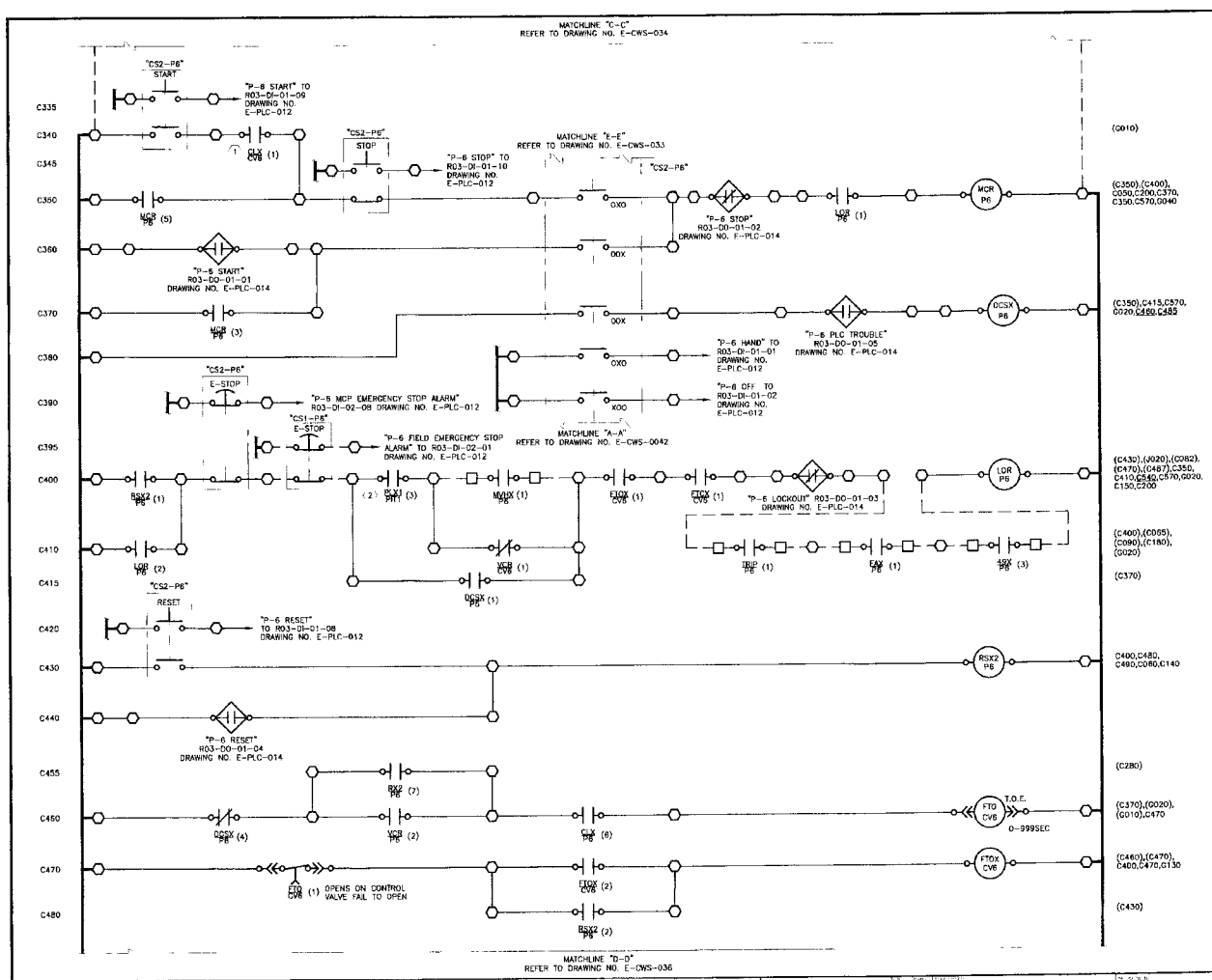

WIRING AND TERMINAL DEVICE LEGEND:

- — — INDICATES WIRING BETWEEN PANELS OR TO A FIELD MOUNTED DEVICE.
- o DEVICE WIRING TERMINAL.
- □ PROPOSED TERMINAL BLOCK LOCATED IN PROPOSED 480V MOTOR CONTROL CENTER (MCC) "MCC-001A" OR "MCC-001B" AS APPLICABLE. ANY DEVICE SHOWN WITH DEVICE WIRING TERMINALS CONNECTED DIRECTLY TO THESE SYMBOLS WITH SOLID LINES IS ALSO LOCATED IN PROPOSED 480V MCC "MCC-001A" OR "MCC-001B" AS APPLICABLE.
- ⬡ PROPOSED TERMINAL BLOCK LOCATED IN PROPOSED MAIN CONTROL PANEL "MCP-001". ANY DEVICE SHOWN WITH DEVICE WIRING TERMINALS CONNECTED DIRECTLY TO THESE SYMBOLS WITH SOLID LINES IS ALSO LOCATED IN MAIN CONTROL PANEL "MCP-001"
- △ TERMINAL BLOCK LOCATED IN FIELD MOUNTED EQUIPMENT AS NOTED. ANY DEVICE SHOWN WITH DEVICE WIRING TERMINALS CONNECTED DIRECTLY TO THESE SYMBOLS WITH SOLID LINES IS ALSO LOCATED IN OR ON EQUIPMENT.

KEY NOTES:

1. CONTROL VALVE 100% CLOSED AUXILIARY RELAY CONTACT REFER TO CONTROL VALVE CONTROL SCHEMATIC FOR ADDITIONAL INFORMATION.
2. SUCTION PRESSURE LOW SHUTDOWN CONTACT REFER TO GENERAL CONTROL SCHEMATICS FOR ADDITIONAL INFORMATION.

REFERENCE DRAWINGS:

- E-OL-010 – E-OL-013 – ONE-LINE DIAGRAMS
- E-CWS-057 – POWER WIRING SCHEMATIC
- E-CWS-046 – VALVE CONTROL SCHEMATIC
- E-WS-011 – VIT INSTRUMENT WIRING SCHEMATIC
- E-PLC-001 – PLC ARCHITECTURE
- E-PLC-012 – E-PLC-014 – PLC I/O WIRING SCHEMATICS
- E-CWS-051 – E-CWS-052 – MCP ELEVATIONS

CONTROL LOGIC DEVICE DESCRIPTIONS

RUNG	DESCRIPTION
C350	MASTER CONTROL RELAY: NORMALLY DE-ENERGIZED. ENERGIZED WHEN (CLX RELAY IS ENERGIZED AND THE START PUSHBUTTON IS DEPRESSED AND THE PUMP SELECTOR SWITCH IS IN THE HAND POSITION) OR (THE PLC "START" OUTPUT IS ENERGIZED AND THE PUMP SELECTOR SWITCH IS IN THE DCS POSITION) AND THE LOR RELAY IS ENERGIZED AND THE PLC "STOP" OUTPUT IS DE-ENERGIZED.
C370	MCP DCS AUXILIARY RELAY: NORMALLY DE-ENERGIZED. ENERGIZED WHEN THE HAND-OFF-DCS SELECTOR SWITCH IS IN THE "DCS" POSITION AND THE PLC TROUBLE OUTPUT IS ENERGIZED.
C400	LOCKOUT RELAY: NORMALLY ENERGIZED. DE-ENERGIZED WHEN EITHER E-STOP IS DEPRESSED (MCP OR FIELD) OR PLC "LOCKOUT" OUTPUT ENERGIZES OR FTOX OR FTOX OR PUMP TRIP OR FAX OR 49X RELAYS ARE DE-ENERGIZED OR ((PLX1 OR (VIBRATION HIGH ALARM WHILE VALVE IS OPEN)) AND SELECTOR SWITCH IS NOT IN DCS POSITION).
C430	RESET AUXILIARY RELAY 2: NORMALLY DE-ENERGIZED. ENERGIZED WHEN "RESET" PUSHBUTTON IS DEPRESSED.
C460	VALVE FAIL TO OPEN TIMING RELAY: NORMALLY DEENERGIZED, BEGINS TIMING UPON DETECTING THAT THE PUMP SELECTOR SWITCH IS NOT IN DCS AND (THE PUMP IS RUNNING OR VCR IS ENERGIZED) AND THE VALVE IS STILL 100% CLOSED.
C470	VALVE FAIL TO OPEN AUXILIARY RELAY: NORMALLY ENERGIZED. DE-ENERGIZED WHEN FTO TIMING RELAY IS ENERGIZED OR (FTO RELAY HAS NOT BEEN ENERGIZED AND RSX2 RELAY IS DE-ENERGIZED).

BAR IN FULL ORIGINAL DRAWING EQUALS ONE INCH. ADJUST SCALE ACCORDINGLY

STATE OF TEXAS — REGISTERED PROFESSIONAL ENGINEER — 2/21/2005

HARUTUNIAN ENGINEERING INCORPORATED
ENGINEERING AND ENVIRONMENTAL CONSULTANTS
306 EAST HUNTLAND DRIVE SUITE 500
AUSTIN, TEXAS 78752

REUSE OF DOCUMENTS
This document and the ideas and designs incorporated herein as an instrument of professional service has been developed, designed and prepared by Harutunian Engineering, Inc. and is not to be used, in whole or part, for any other project without the written authorization of Water District No. 10 and Harutunian Engineering, Inc. © 2005

HEI
HEI
HEI
FEBRUARY 2005
NONE

TRAVIS COUNTY WATER CONTROL & IMPROVEMENT DISTRICT NO 10
PUMP STATION NO. 1

PUMP MOTOR "P-6" CONTROL SCHEMATIC (SHEET 4 OF 5)

PROJECT NO. 2002-210 | SHEET 87 | DWG. NO. E-CWS-035

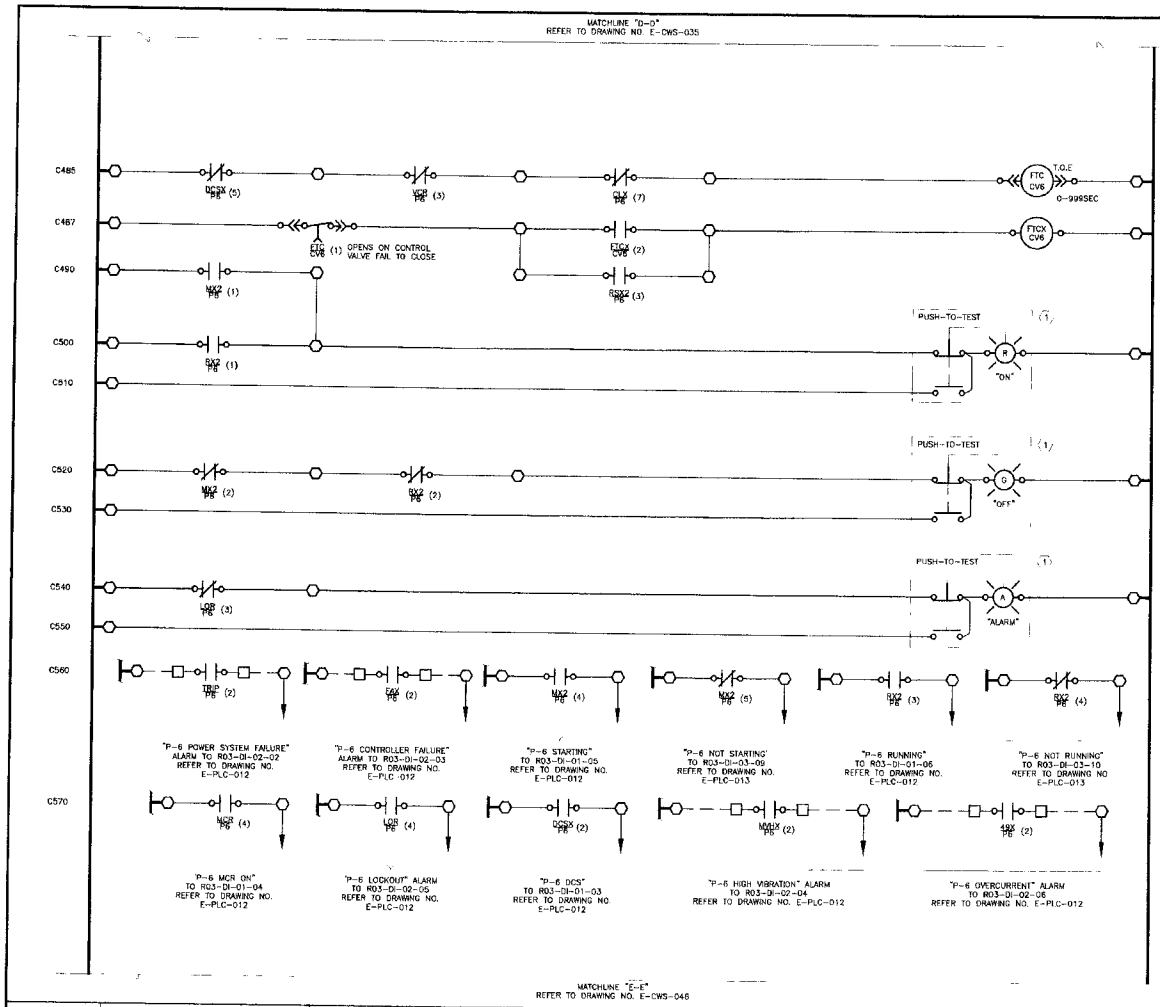

WIRING AND TERMINAL DEVICE LEGEND:

- — — INDICATES WIRING BETWEEN PANELS OR TO A FIELD MOUNTED DEVICE.
- ○ DEVICE WIRING TERMINAL
- □ PROPOSED TERMINAL BLOCK LOCATED IN PROPOSED 480V MOTOR CONTROL CENTER (MCC) "MCC-001A" OR "MCC-001B", AS APPLICABLE. ANY DEVICE SHOWN WITH DEVICE WIRING TERMINALS CONNECTED DIRECTLY TO THESE SYMBOLS WITH SOLID LINES IS ALSO LOCATED IN PROPOSED 480V MCC "MCC-001A" OR "MCC-001B", AS APPLICABLE.
- ⬡ PROPOSED TERMINAL BLOCK LOCATED IN PROPOSED MAIN CONTROL PANEL "MCP-001" ANY DEVICE SHOWN WITH DEVICE WIRING TERMINALS CONNECTED DIRECTLY TO THESE SYMBOLS WITH SOLID LINES IS ALSO LOCATED IN MAIN CONTROL PANEL "MCP-001"
- △ TERMINAL BLOCK LOCATED IN FIELD MOUNTED EQUIPMENT AS NOTED. ANY DEVICE SHOWN WITH DEVICE WIRING TERMINALS CONNECTED DIRECTLY TO THESE SYMBOLS WITH SOLID LINES IS ALSO LOCATED IN OR ON EQUIPMENT

KEY NOTES:

(1) INDICATING PILOT LIGHT WITH INTEGRAL MOMENTARY ACTION "PUSH-TO-TEST" PUSHBUTTON. REFER TO ELECTRICAL SPECIFICATIONS.

REFERENCE DRAWINGS:

E-OL-010 – E-OL-013 – ONE-LINE DIAGRAMS

E-PLC-001 – PLC ARCHITECTURE

E-PLC-012 – E-PLC-014 – PLC I/O WIRING SCHEMATICS

E-CWS-051 – E-CWS-052 – MCP ELEVATIONS

CONTROL LOGIC DEVICE DESCRIPTIONS

RUNG	DESCRIPTION
C485	VALVE FAIL TO CLOSE TIMING RELAY: NORMALLY DE-ENERGIZED, BEGINS TIMING UPON DETECTING THAT THE PUMP SELECTOR SWITCH IS NOT IN DCS POSITION AND VCR RELAY IS DE-ENERGIZED AND THE VALVE HAS NOT REACHED 100% CLOSED.
C487	VALVE FAIL TO CLOSE AUXILIARY RELAY: NORMALLY ENERGIZED. DE-ENERGIZES WHEN FTC RELAY HAS ENERGIZED ON VALVE FAIL TO CLOSE OR (FTC RELAY HAS NOT BEEN ENERGIZED AND NSX2 RELAY IS DE-ENERGIZED).

BAR LENGTH 1 ORIGINAL DRAWING EQUALS ONE IN ADJUST SCALE ACCORDINGLY

2/21/2005

HARUTUNIAN ENGINEERING INCORPORATED
ENGINEERING AND ENVIRONMENTAL CONSULTANTS
305 EAST HUNTLAND DRIVE SUITE 500
AUSTIN, TEXAS 78752

REUSE OF DOCUMENTS
This document and the ideas and designs incorporated herein as an instrument of professional service has been developed, designed and prepared by Harutunian Engineering, Inc. and is not to be used, in whole or part, for any other project without the written authorization of Water District No. 10 and Harutunian Engineering, Inc. © 2005

HEI
HEI
HEI
FEBRUARY 2005
NONE

TRAVIS COUNTY WATER CONTROL & IMPROVEMENT DISTRICT NO 10
PUMP STATION NO. 1

PUMP MOTOR "P-6" CONTROL SCHEMATIC
(SHEET 5 OF 5)

2002-210 | SHEET 88 | E-CWS-036

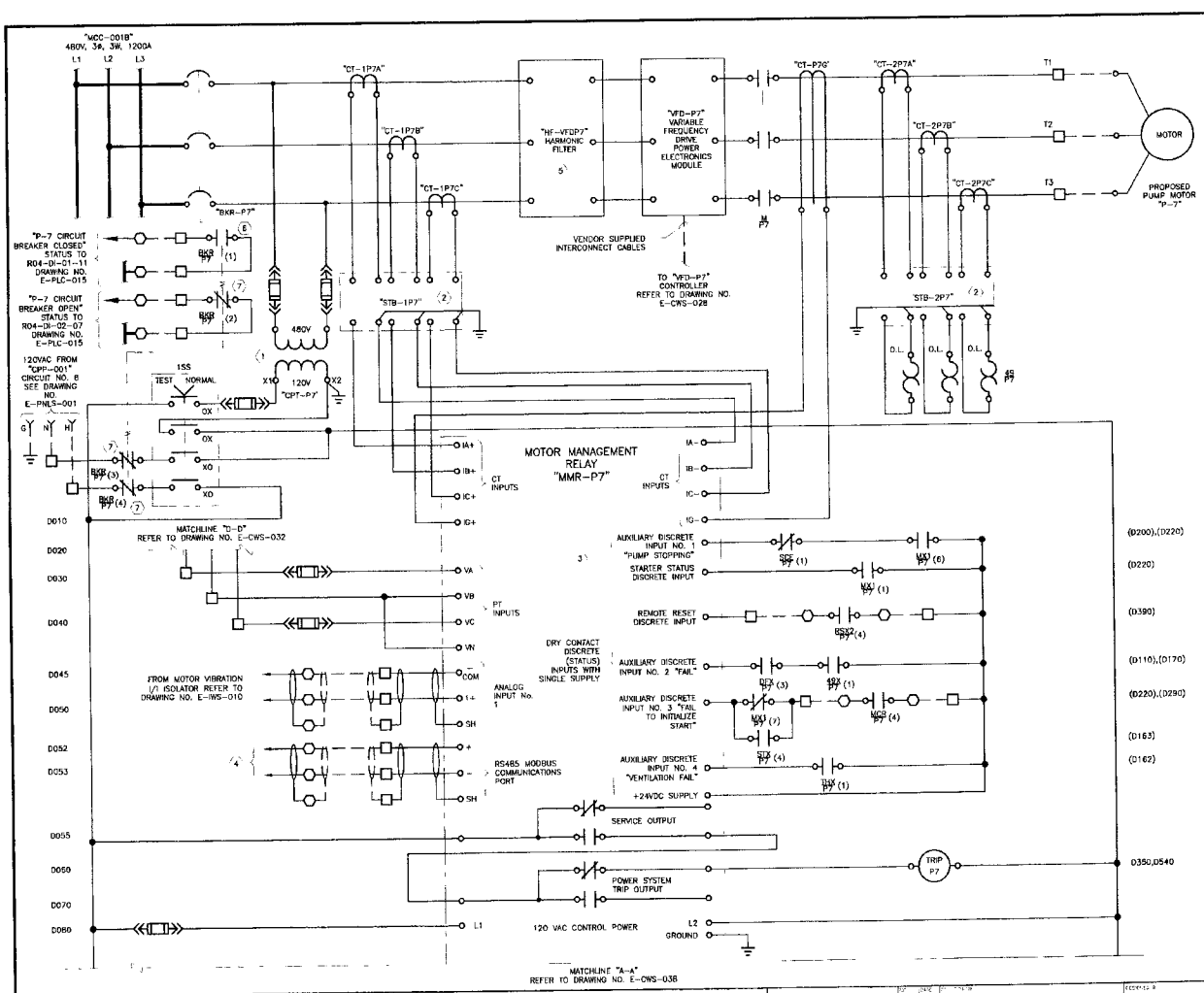

WIRING AND TERMINAL DEVICE LEGEND:

- — — INDICATES WIRING BETWEEN PANELS OR TO A FIELD MOUNTED DEVICE.
- o DEVICE WIRING TERMINAL
- □ PROPOSED TERMINAL BLOCK LOCATED IN PROPOSED 480V MOTOR CONTROL CENTER (MCC) "MCC-001A" OR "MCC-001B", AS APPLICABLE. ANY DEVICE SHOWN WITH DEVICE WIRING TERMINALS CONNECTED DIRECTLY TO THESE SYMBOLS WITH SOLID LINES IS ALSO LOCATED IN PROPOSED 480V MCC "MCC-001A" OR "MCC-001B", AS APPLICABLE.
- ⬡ PROPOSED TERMINAL BLOCK LOCATED IN PROPOSED MAIN CONTROL PANEL "MCP-001". ANY DEVICE SHOWN WITH DEVICE WIRING TERMINALS CONNECTED DIRECTLY TO THESE SYMBOLS WITH SOLID LINES IS ALSO LOCATED IN MAIN CONTROL PANEL "MCP-001"
- △ TERMINAL BLOCK LOCATED IN FIELD MOUNTED EQUIPMENT AS NOTED. ANY DEVICE SHOWN WITH DEVICE WIRING TERMINALS CONNECTED DIRECTLY TO THESE SYMBOLS WITH SOLID LINES IS ALSO LOCATED IN OR ON EQUIPMENT

KEY NOTES:

1. CONTROL POWER TRANSFORMER SHALL HAVE MINIMUM RATING OF 1500VA. TRANSFORMER SHALL BE SIZED ACCORDING TO ELECTRICAL SPECIFICATIONS.
2. FURNISH AND INSTALL THE SHORTING/TAP CHANGING TERMINAL BLOCKS (STB) IN THE METERING COMPARTMENT FOR TERMINATING THE CABLING FROM THE PROPOSED CURRENT TRANSFORMERS.
3. NOT ALL CONNECTIONS TO THE MOTOR MANAGEMENT RELAY ARE SHOWN ON THIS DRAWING. REFER TO DRAWING E-IWS-006 FOR ADDITIONAL CONNECTIONS
4. TO/FROM RS485/232 COMMUNICATION CONVERTER LOCATED INSIDE MAIN CONTROL PANEL "MCP-001". REFER TO DRAWING NO. E-PLC-001 FOR ADDITIONAL INFORMATION.
5. REFER TO ONE-LINE DIAGRAMS AND THE SPECIFICATIONS FOR ADDITIONAL INFORMATION REGARDING HARMONIC FILTER. NOT ALL FILTER COMPONENTS ARE SHOWN HERE.
6. CONTACT OPEN WHEN ASSOCIATED CIRCUIT BREAKER IS OPEN.
7. CONTACT CLOSED WHEN ASSOCIATED CIRCUIT BREAKER IS CLOSED.

REFERENCE DRAWINGS:

E-OL-010 – E-OL-013 – ONE-LINE DIAGRAMS
E-IWS-006 – MMR WIRING SCHEMATIC
E-PLC-001 – PLC ARCHITECTURE
E-PLC-015 – E-PLC-018 – PLC I/O WIRING SCHEMATICS
E-CWS-051 – E-CWS-052 – MCP ELEVATIONS

CONTROL LOGIC DEVICE DESCRIPTIONS

RUNG	DESCRIPTION
D060	POWER SYSTEM FAILURE RELAY: NORMALLY ENERGIZED. DE-ENERGIZES WHEN MMR DETECTS A POWER SYSTEM FAILURE.

BAR EN 1 ON ORIGINAL DRAWING IS 1 INCH. IF NOT, SCALE ACCORDINGLY

2/21/2005

HARUTUNIAN ENGINEERING INCORPORATED
ENGINEERING AND ENVIRONMENTAL CONSULTANTS
305 EAST HUNTLAND DRIVE SUITE 500
AUSTIN, TEXAS 78752

REUSE OF DOCUMENTS
This document and the ideas and designs incorporated herein as an instrument of professional service has been developed, designed and prepared by Harutunian Engineering, Inc. and is not to be used, in whole or part, for any other project without the written authorization of Water District No. 10 and Harutunian Engineering, Inc. © 2005

DESIGNED BY HEI
DRAWN BY HEI
CHECKED BY HEI
DATE FEBRUARY 2005
SCALE NONE

TRAVIS COUNTY WATER CONTROL & IMPROVEMENT DISTRICT NO 10
PUMP STATION NO 1

PUMP MOTOR "P-7" CONTROL SCHEMATIC (SHEET 1 OF 5)

PROJ. NO. 2002-210 | SHEET 89 | DWG. NO. E-CWS-037

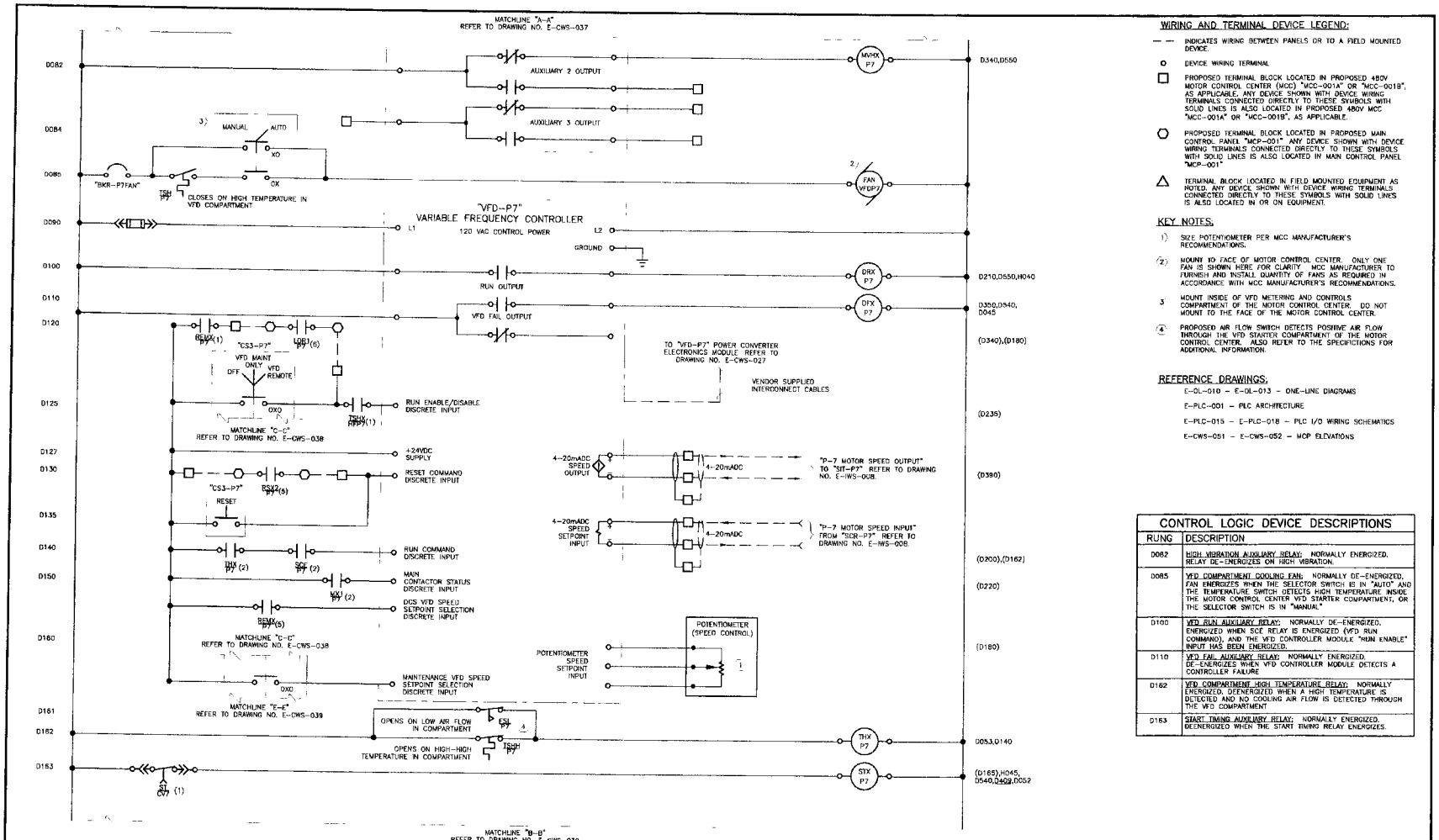

WIRING AND TERMINAL DEVICE LEGEND:

- — — INDICATES WIRING BETWEEN PANELS OR TO A FIELD MOUNTED DEVICE.
- o DEVICE WIRING TERMINAL
- □ PROPOSED TERMINAL BLOCK LOCATED IN PROPOSED 480V MOTOR CONTROL CENTER (MCC) "MCC-001A" OR "MCC-001B", AS APPLICABLE. ANY DEVICE SHOWN WITH DEVICE WIRING TERMINALS CONNECTED DIRECTLY TO THESE SYMBOLS WITH SOLID LINES IS ALSO LOCATED IN PROPOSED 480V MCC "MCC-001A" OR "MCC-001B", AS APPLICABLE.
- ○ PROPOSED TERMINAL BLOCK LOCATED IN PROPOSED MAIN CONTROL PANEL "MCP-001" ANY DEVICE SHOWN WITH DEVICE WIRING TERMINALS CONNECTED DIRECTLY TO THESE SYMBOLS WITH SOLID LINES IS ALSO LOCATED IN MAIN CONTROL PANEL "MCP-001"
- △ TERMINAL BLOCK LOCATED IN FIELD MOUNTED EQUIPMENT AS NOTED. ANY DEVICE SHOWN WITH DEVICE WIRING TERMINALS CONNECTED DIRECTLY TO THESE SYMBOLS WITH SOLID LINES IS ALSO LOCATED IN OR ON EQUIPMENT.

KEY NOTES:

1) SIZE POTENTIOMETER PER MCC MANUFACTURER'S RECOMMENDATIONS.

2) MOUNT TO FACE OF MOTOR CONTROL CENTER. ONLY ONE FAN IS SHOWN HERE FOR CLARITY. MCC MANUFACTURER TO FURNISH AND INSTALL QUANTITY OF FANS AS REQUIRED IN ACCORDANCE WITH MCC MANUFACTURER'S RECOMMENDATIONS.

3 MOUNT INSIDE OF VFD METERING AND CONTROLS COMPARTMENT OF THE MOTOR CONTROL CENTER. DO NOT MOUNT TO THE FACE OF THE MOTOR CONTROL CENTER.

4) PROPOSED AIR FLOW SWITCH DETECTS POSITIVE AIR FLOW THROUGH THE VFD STARTER COMPARTMENT OF THE MOTOR CONTROL CENTER. ALSO REFER TO THE SPECIFICTIONS FOR ADDITIONAL INFORMATION.

REFERENCE DRAWINGS:

E-OL-010 – E-OL-013 – ONE-LINE DIAGRAMS

E-PLC-001 – PLC ARCHITECTURE

E-PLC-015 – E-PLC-018 – PLC I/O WIRING SCHEMATICS

E-CWS-051 – E-CWS-052 – MCP ELEVATIONS

CONTROL LOGIC DEVICE DESCRIPTIONS

RUNG	DESCRIPTION
D082	HIGH VIBRATION AUXILIARY RELAY: NORMALLY ENERGIZED. RELAY DE-ENERGIZES ON HIGH VIBRATION.
D085	VFD COMPARTMENT COOLING FAN: NORMALLY DE-ENERGIZED. FAN ENERGIZES WHEN THE SELECTOR SWITCH IS IN "AUTO" AND THE TEMPERATURE SWITCH DETECTS HIGH TEMPERATURE INSIDE THE MOTOR CONTROL CENTER VFD STARTER COMPARTMENT, OR THE SELECTOR SWITCH IS IN "MANUAL"
D100	VFD RUN AUXILIARY RELAY: NORMALLY DE-ENERGIZED. ENERGIZED WHEN SCE RELAY IS ENERGIZED (VFD RUN COMMAND), AND THE VFD CONTROLLER MODULE "RUN ENABLE" INPUT HAS BEEN ENERGIZED.
D110	VFD FAIL AUXILIARY RELAY: NORMALLY ENERGIZED. DE-ENERGIZES WHEN VFD CONTROLLER MODULE DETECTS A CONTROLLER FAILURE
D162	VFD COMPARTMENT HIGH TEMPERATURE RELAY: NORMALLY ENERGIZED. DEENERGIZED WHEN A HIGH TEMPERATURE IS DETECTED AND NO COOLING AIR FLOW IS DETECTED THROUGH THE VFD COMPARTMENT
D163	START TIMING AUXILIARY RELAY: NORMALLY ENERGIZED. DEENERGIZED WHEN THE START TIMING RELAY ENERGIZES.

BAR IS 1 IN. ON ORIGINAL DRAWING IF NOT, THEN ADJUST SCALE ACCORDINGLY

STATE OF TEXAS REGISTERED PROFESSIONAL ENGINEER 2/21/2005

HARUTUNIAN ENGINEERING INCORPORATED
ENGINEERING AND ENVIRONMENTAL CONSULTANTS
305 EAST HUNTLAND DRIVE SUITE 500
AUSTIN, TEXAS 78752

REUSE OF DOCUMENTS
This document and the ideas and designs incorporated herein as an instrument of professional service has been developed, designed and prepared by Harutunian Engineering, Inc. and is not to be used, in whole or part, for any other project without the written authorization of Water District No. 10 and Harutunian Engineering, Inc. © 2005

DESIGNED BY: HEI
DRAWN BY: HEI
APPROVED BY: HEI
DATE: FEBRUARY 2005
SCALE: NONE

TRAVIS COUNTY WATER CONTROL & IMPROVEMENT DISTRICT NO. 10
PUMP STATION NO. 1

PUMP MOTOR "P-7" CONTROL SCHEMATIC
(SHEET 2 OF 5)

PROJECT NO. 2002-210 | SHEET 90 | E-CWS-038

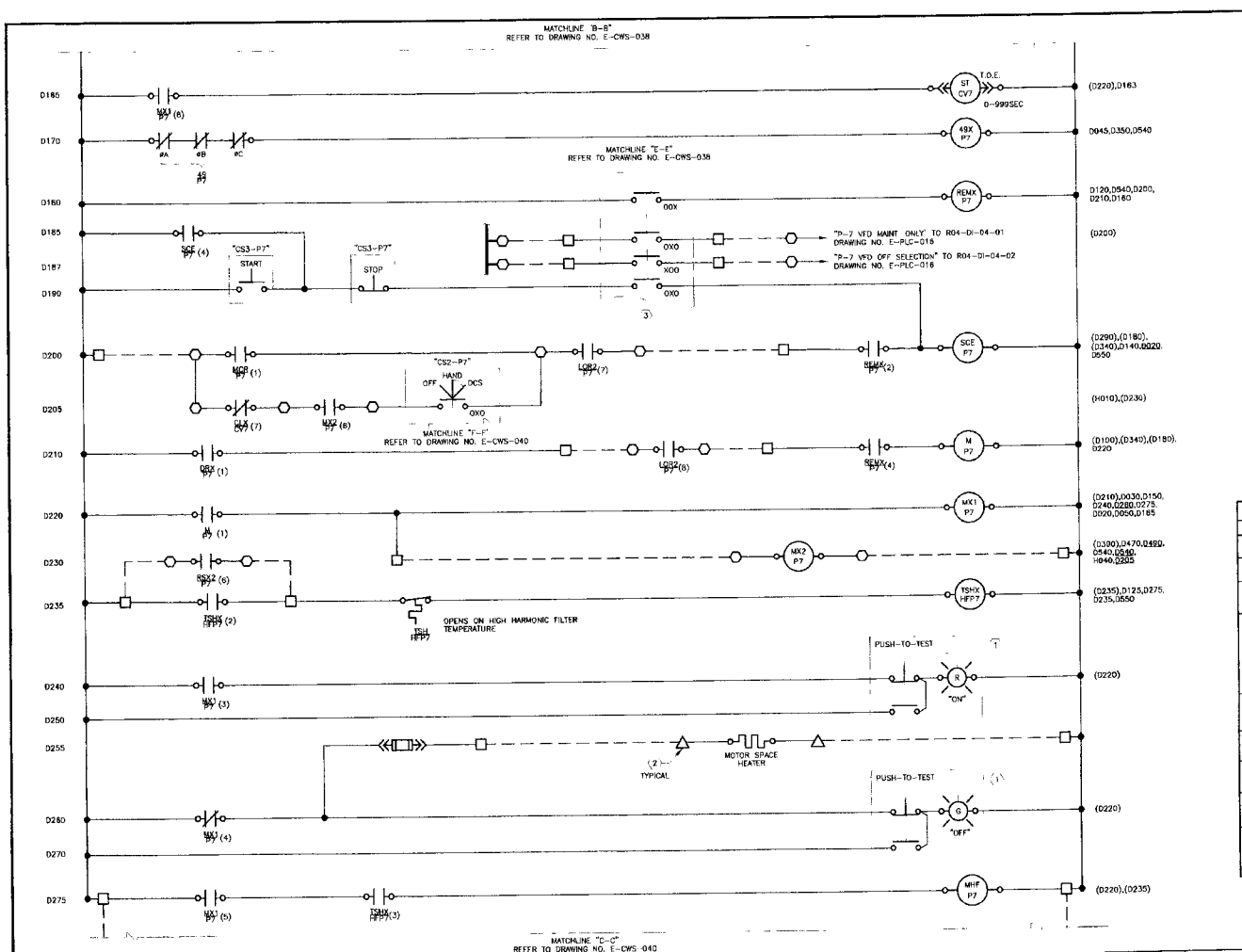

WIRING AND TERMINAL DEVICE LEGEND:

- — — INDICATES WIRING BETWEEN PANELS OR TO A FIELD MOUNTED DEVICE.
- o DEVICE WIRING TERMINAL
- □ PROPOSED TERMINAL BLOCK LOCATED IN PROPOSED 480V MOTOR CONTROL CENTER (MCC) "MCC-001A" OR "MCC-001B", AS APPLICABLE. ANY DEVICE SHOWN WITH DEVICE WIRING TERMINALS CONNECTED DIRECTLY TO THESE SYMBOLS WITH SOLID LINES IS ALSO LOCATED IN PROPOSED 480V MCC "MCC-001A" OR "MCC-001B" AS APPLICABLE.
- ⬡ PROPOSED TERMINAL BLOCK LOCATED IN PROPOSED MAIN CONTROL PANEL "MCP-001" ANY DEVICE SHOWN WITH DEVICE WIRING TERMINALS CONNECTED DIRECTLY TO THESE SYMBOLS WITH SOLID LINES IS ALSO LOCATED IN MAIN CONTROL PANEL "MCP-001"
- △ TERMINAL BLOCK LOCATED IN FIELD MOUNTED EQUIPMENT AS NOTED. ANY DEVICE SHOWN WITH DEVICE WIRING TERMINALS CONNECTED DIRECTLY TO THESE SYMBOLS WITH SOLID LINES IS ALSO LOCATED IN OR ON EQUIPMENT

KEY NOTES:

1. INDICATING PILOT LIGHT WITH INTEGRAL MOMENTARY ACTION "PUSH-TO-TEST" PUSHBUTTON. REFER TO ELECTRICAL SPECIFICATIONS.
2. PROPOSED TERMINAL BLOCK IN SPACE HEATER TERMINATION BOX LOCATED ON MOTOR. REFER TO SPECIFICATIONS.
3. FURNISH AND INSTALL ADDITIONAL CONTACTS (AND IF REQUIRED, ASSOCIATED INTERPOSING RELAYS) AS REQUIRED TO FACILITATE VFD OPERATION AND MAKE ALL FINAL CONNECTIONS.

REFERENCE DRAWINGS:

E-OL-010 – E-OL-013 – ONE-LINE DIAGRAMS

E-PLC-001 – PLC ARCHITECTURE

E-PLC-015 – E-PLC-018 – PLC I/O WIRING SCHEMATICS

E-CWS-051 – E-CWS-052 – MCP ELEVATIONS

CONTROL LOGIC DEVICE DESCRIPTIONS

RUNG	DESCRIPTION
D165	START TIMING RELAY: NORMALLY DE-ENERGIZED. ENERGIZED WHEN MAIN CONTACTOR AUXILIARY RELAY IS ENERGIZED.
D170	MOTOR OVERLOAD AUXILIARY RELAY: NORMALLY ENERGIZED. DE-ENERGIZED WHEN MOTOR OVERLOAD IS DETECTED.
D180	VFD REMOTE AUXILIARY RELAY: NORMALLY DE-ENERGIZED. ENERGIZED WHEN THE OFF-LOCAL-REMOTE SELECTOR SWITCH IS IN THE "REMOTE" POSITION.
D200	STARTER CONTROL ENABLE AUXILIARY RELAY: NORMALLY DE-ENERGIZED. ENERGIZED WHEN THE LOCKOUT RELAY AND REMX RELAYS ARE ENERGIZED AND ((THE MOR RELAY IS ENERGIZED) OR WHEN (THE VALVE IS NOT FULLY CLOSED AND THE RX2 RELAY IS ENERGIZED WHILE THE SELECTOR SWITCH IS IN "HAND")) OR THE VFD SELECTOR SWITCH IS IN THE VFD MAINT ONLY POSITION AND THE "START" BUTTON ON THE VFD IS DEPRESSED.
D210	MAIN CONTACTOR COIL: NORMALLY DE-ENERGIZED. ENERGIZED WHEN THE DRX RELAY IS ENERGIZED AND THE LOR AND REMX RELAYS ARE ENERGIZED.
D220	MAIN CONTACTOR AUXILIARY RELAY 1: NORMALLY DE-ENERGIZED. ENERGIZED WHEN THE MAIN (M) CONTACTOR COIL IS ENERGIZED.
D230	MAIN CONTACTOR AUXILIARY RELAY 2: NORMALLY DE-ENERGIZED. ENERGIZED WHEN THE MAIN (M) CONTACTOR COIL IS ENERGIZED.
D235	HARMONIC FILTER HIGH TEMPERATURE RELAY: NORMALLY ENERGIZED. DE-ENERGIZES WHEN THE HARMONIC FILTER EXPERIENCES AN OVER TEMPERATURE CONDITION.
D275	HARMONIC FILTER CAPACITOR ISOLATION CONTACTOR COIL: NORMALLY DE-ENERGIZED. ENERGIZED WHEN THE MAIN (M) CONTACTOR COIL AUXILIARY RELAY IS ENERGIZED AND THE HARMONIC FILTER HIGH TEMPERATURE RELAY IS ENERGIZED.

REM - NOTE: THE ORIGINAL DRAWING EQUALS SIM. 100" ADJUST SCALE ACCORDINGLY

STATE OF TEXAS REGISTERED PROFESSIONAL ENGINEER 2/2/2005

HARUTUNIAN ENGINEERING INCORPORATED
ENGINEERING AND ENVIRONMENTAL CONSULTANTS
305 EAST HUNTLAND DRIVE SUITE 500
AUSTIN, TEXAS 78752

REUSE OF DOCUMENTS
This document and the ideas and designs incorporated herein as an instrument of professional service has been developed, designed and prepared by Harutunian Engineering, Inc. and is not to be used, in whole or part, for any other project without the written authorization of Water District No. 10 and Harutunian Engineering, Inc. © 2001

FEBRUARY 2005
NONE

TRAVIS COUNTY WATER CONTROL & IMPROVEMENT DISTRICT NO 10
PUMP STATION NO 1

PUMP MOTOR "P-7" CONTROL SCHEMATIC
(SHEET 3 OF 5)

2002-210 | SHEET 91 | E-CWS-039

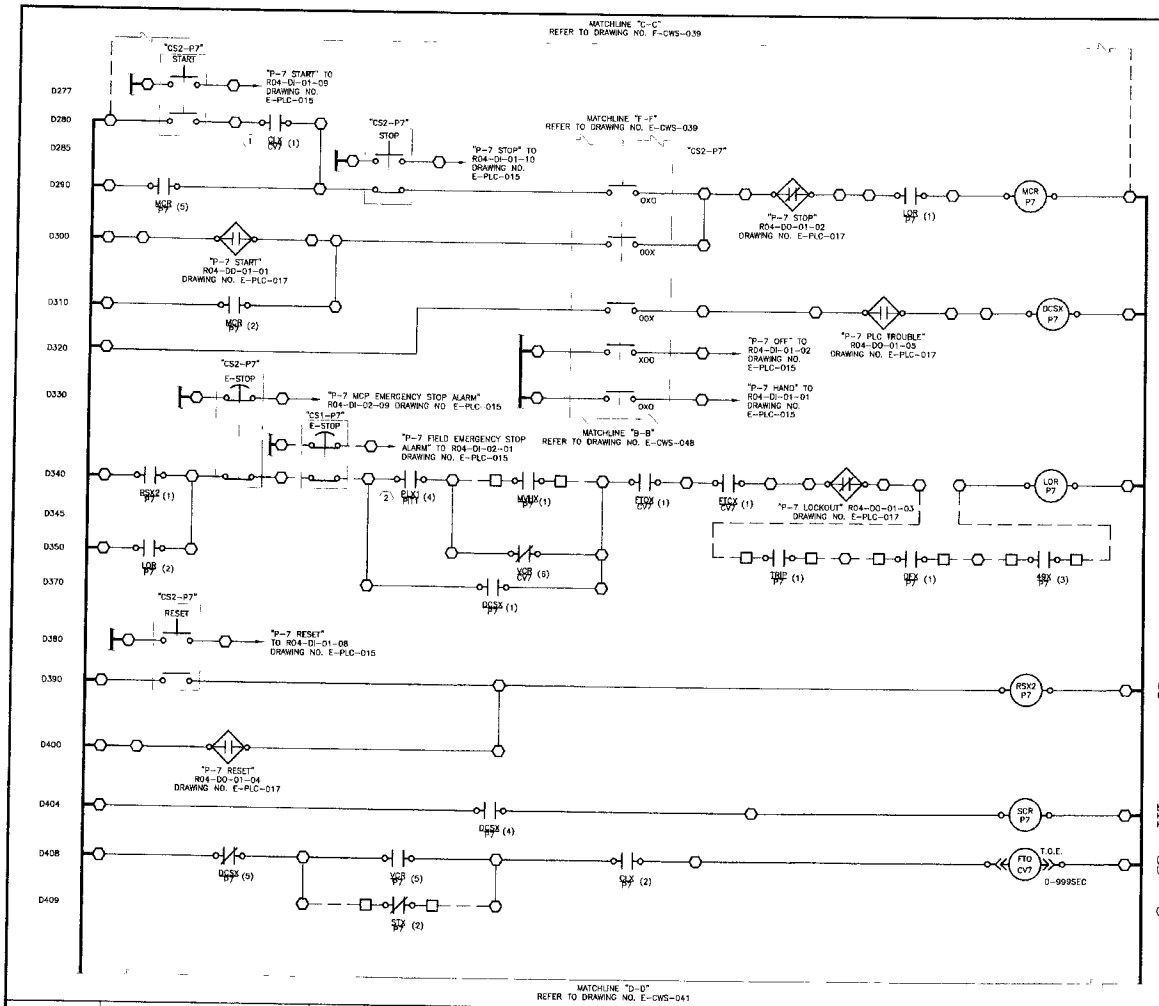

WIRING AND TERMINAL DEVICE LEGEND

- — — INDICATES WIRING BETWEEN PANELS OR TO A FIELD MOUNTED DEVICE.
- ○ DEVICE WIRING TERMINAL
- □ PROPOSED TERMINAL BLOCK LOCATED IN PROPOSED 480V MOTOR CONTROL CENTER (MCC) "MCC-001A" OR "MCC-001B", AS APPLICABLE. ANY DEVICE SHOWN WITH DEVICE WIRING TERMINALS CONNECTED DIRECTLY TO THESE SYMBOLS WITH SOLID LINES IS ALSO LOCATED IN PROPOSED 480V MCC "MCC-001A" OR "MCC-001B", AS APPLICABLE
- ⬡ PROPOSED TERMINAL BLOCK LOCATED IN PROPOSED MAIN CONTROL PANEL "MCP-001". ANY DEVICE SHOWN WITH DEVICE WIRING TERMINALS CONNECTED DIRECTLY TO THESE SYMBOLS WITH SOLID LINES IS ALSO LOCATED IN MAIN CONTROL PANEL "MCP-001"
- △ TERMINAL BLOCK LOCATED IN FIELD MOUNTED EQUIPMENT AS NOTED. ANY DEVICE SHOWN WITH DEVICE WIRING TERMINALS CONNECTED DIRECTLY TO THESE SYMBOLS WITH SOLID LINES IS ALSO LOCATED IN OR ON EQUIPMENT

KEY NOTES:

1. CONTROL VALVE 100% CLOSED AUXILIARY RELAY CONTACT REFER TO CONTROL VALVE CONTROL SCHEMATIC FOR ADDITIONAL INFORMATION.
2. SUCTION PRESSURE LOW SHUTDOWN CONTACT REFER TO GENERAL CONTROL SCHEMATICS FOR ADDITIONAL INFORMATION.

REFERENCE DRAWINGS.

E-OL-010 – E-OL-013 – ONE-LINE DIAGRAMS
E-CWS-057 – INSTRUMENT POWER WIRING SCHEMATICS
E-CWS-048 – E-CWS-049 – VALVE CONTROL SCHEMATIC
E-PLC-001 – PLC ARCHITECTURE
E-PLC-015 – E-PLC-018 – PLC I/O WIRING SCHEMATICS
E-CWS-051 – E-CWS-052 – MCP ELEVATIONS

CONTROL LOGIC DEVICE DESCRIPTIONS

RUNG	DESCRIPTION
D290	MASTER CONTROL RELAY: NORMALLY DE-ENERGIZED. ENERGIZED WHEN (CLX RELAY IS ENERGIZED AND THE START PUSHBUTTON IS DEPRESSED AND THE PUMP SELECTOR SWITCH IS IN THE HAND POSITION) OR (THE PLC "START" OUTPUT IS ENERGIZED AND THE PUMP SELECTOR SWITCH IS IN THE DCS POSITION) AND THE LOR RELAY IS ENERGIZED AND THE PLC "STOP" OUTPUT IS DE-ENERGIZED.
D310	MCP DCS AUXILIARY RELAY: NORMALLY DE-ENERGIZED. ENERGIZED WHEN THE HAND-OFF-DCS SELECTOR SWITCH IS IN THE "DCS" POSITION AND THE PLC TROUBLE OUTPUT IS ENERGIZED.
D340	LOCKOUT RELAY: NORMALLY ENERGIZED. DE-ENERGIZED WHEN EITHER E-STOP IS DEPRESSED (MCP OR FIELD) OR PLC "LOCKOUT" OUTPUT ENERGIZES OR FTOX OR FTCX OR PUMP TRIP OR FAX OR 49X RELAYS ARE DE-ENERGIZED OR ((PLX1 OR (VIBRATION HIGH ALARM WHILE VALVE IS OPEN)) AND SELECTOR SWITCH IS NOT IN DCS POSITION).
D390	RESET AUXILIARY RELAY 2: NORMALLY DE-ENERGIZED. ENERGIZED WHEN "RESET" PUSHBUTTON IS DEPRESSED OR PLC RESET OUTPUT IS ENERGIZED.
D404	SPEED CONTROL SELECTION RELAY: NORMALLY ENERGIZED, DE-ENERGIZES WHEN THE DCSX RELAY IS DEENERGIZED.
D408	VALVE FAIL TO OPEN TIMING RELAY: NORMALLY ENERGIZED, BEGINS TIMING UPON DETECTING THAT THE VALVE CONTROL RELAY IS ENERGIZED AND THE VALVE IS STILL 100% CLOSED.

HAR...ENGTH ON ORIGINAL DRAWING EQUALS ONE INCH. ADJUST SCALE ACCORDINGLY

2/21/2005

HARUTUNIAN ENGINEERING INCORPORATED
ENGINEERING AND ENVIRONMENTAL CONSULTANTS
305 EAST HUNTLAND DRIVE SUITE 300
AUSTIN, TEXAS 78752

REUSE OF DOCUMENTS
This document and the ideas and designs incorporated herein as an instrument of professional service has been developed, designed and prepared by Harutunian Engineering, Inc. and is not to be used, in whole or part, for any other project without the written authorization of Water District No. 10 and Harutunian Engineering, Inc. © 2005

HEI
HEI
HEI
FEBRUARY 2005
NONE

TRAVIS COUNTY WATER CONTROL & IMPROVEMENT DISTRICT NO 10
PUMP STATION NO. 1

PUMP MOTOR "P-7" CONTROL SCHEMATIC (SHEET 4 OF 5)

2002-210 | SHEET 92 | E-CWS-040

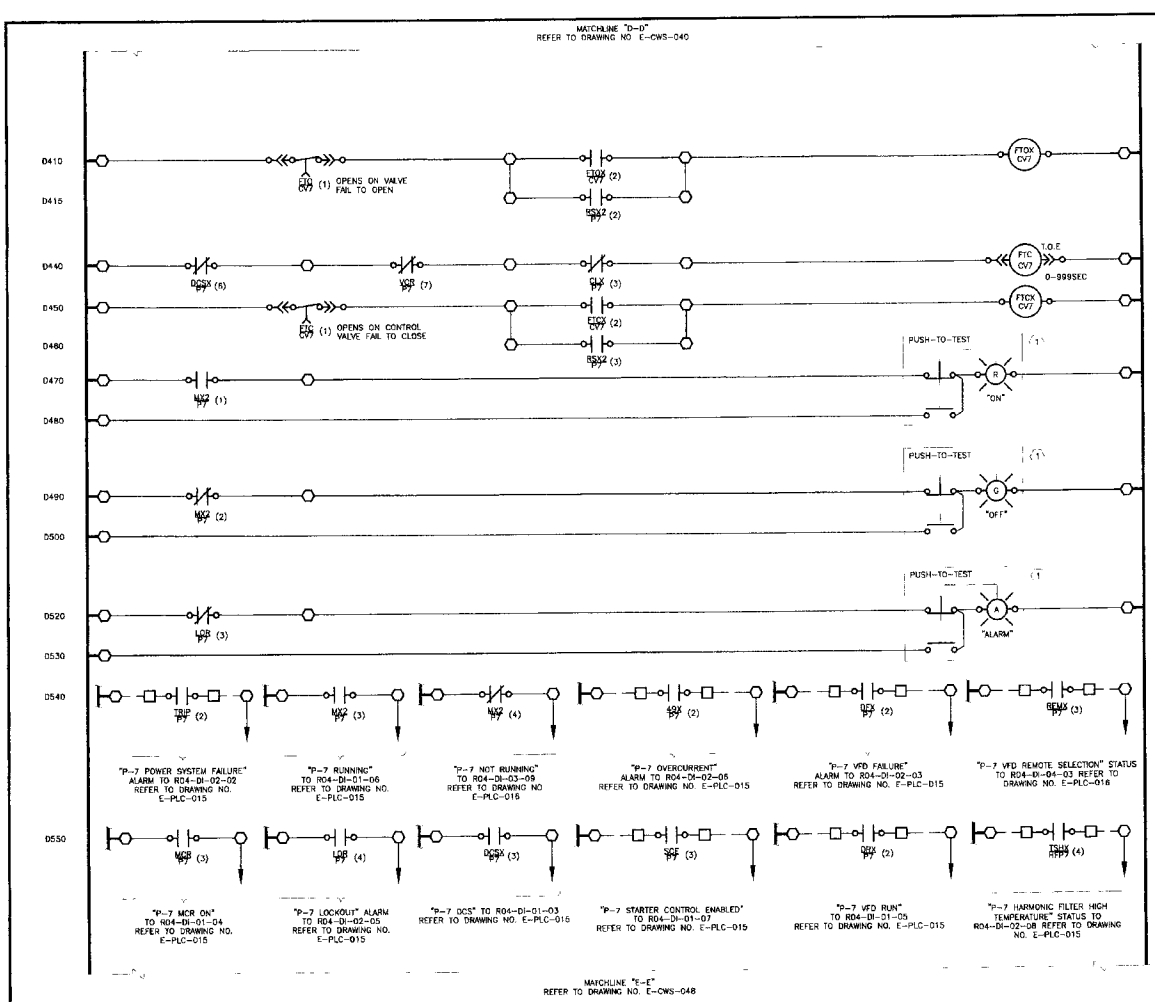

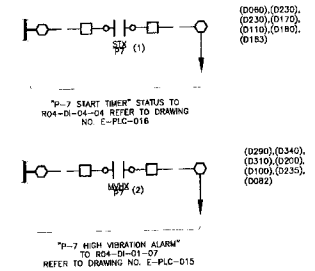

WIRING AND TERMINAL DEVICE LEGEND:

- — — INDICATES WIRING BETWEEN PANELS OR TO A FIELD MOUNTED DEVICE.
- ○ DEVICE WIRING TERMINAL.
- □ PROPOSED TERMINAL BLOCK LOCATED IN PROPOSED 480V MOTOR CONTROL CENTER (MCC) "MCC-001A" OR "MCC-001B" AS APPLICABLE. ANY DEVICE SHOWN WITH DEVICE WIRING TERMINALS CONNECTED DIRECTLY TO THESE SYMBOLS WITH SOLID LINES IS ALSO LOCATED IN PROPOSED 480V MCC "MCC-001A" OR "MCC-001B", AS APPLICABLE.
- ⬡ PROPOSED TERMINAL BLOCK LOCATED IN PROPOSED MAIN CONTROL PANEL "MCP-001" ANY DEVICE SHOWN WITH DEVICE WIRING TERMINALS CONNECTED DIRECTLY TO THESE SYMBOLS WITH SOLID LINES IS ALSO LOCATED IN MAIN CONTROL PANEL "MCP-001"
- △ TERMINAL BLOCK LOCATED IN FIELD MOUNTED EQUIPMENT AS NOTED. ANY DEVICE SHOWN WITH DEVICE WIRING TERMINALS CONNECTED DIRECTLY TO THESE SYMBOLS WITH SOLID LINES IS ALSO LOCATED IN OR ON EQUIPMENT

KEY NOTES:

(1) INDICATING PILOT LIGHT WITH INTEGRAL MOMENTARY ACTION "PUSH-TO-TEST" PUSHBUTTON. REFER TO ELECTRICAL SPECIFICATIONS.

REFERENCE DRAWINGS:

E-OL-010 – E-OL-013 – ONE-LINE DIAGRAMS

E-PLC-001 – PLC ARCHITECTURE

E-PLC-015 – E-PLC-018 – PLC I/O WIRING SCHEMATICS

E-CWS-051 – E-CWS-052 – MCP ELEVATIONS

E-IWS-012 – VIT INSTRUMENT WIRING SCHEMATIC

CONTROL LOGIC DEVICE DESCRIPTIONS

RUNG	DESCRIPTION
D410	VALVE FAIL TO OPEN AUXILIARY RELAY: NORMALLY ENERGIZED. DE-ENERGIZES WHEN FTO RELAY HAS TIMED OUT ON VALVE FAIL TO OPEN.
D440	VALVE FAIL TO CLOSE TIMING RELAY: NORMALLY ENERGIZED. DE-ENERGIZES AND BEGINS TIMING WHEN VCR DEENERGIZES AND THE VALVE HAS NOT REACHED 100% CLOSED.
D450	VALVE FAIL TO CLOSE AUXILIARY RELAY: NORMALLY ENERGIZED. DE-ENERGIZES WHEN FTC RELAY HAS TIMED OUT ON VALVE FAIL TO CLOSE.

BAR LEN 1" ON ORIGINAL DRAWING EQUALS ONE INCH ADJUST SCALE ACCORDINGLY

STATE OF TEXAS — 2/21/2005

HARUTUNIAN ENGINEERING INCORPORATED
ENGINEERING AND ENVIRONMENTAL CONSULTANTS
305 EAST HUNTLAND DRIVE SUITE 500
AUSTIN, TEXAS 78752

REUSE OF DOCUMENTS
This document and the ideas and designs incorporated herein as an instrument of professional service has been developed, designed and prepared by Harutunian Engineering, Inc. and is not to be used, in whole or part, for any other project without the written authorization of Water District No. 10 and Harutunian Engineering, Inc. © 2005

DESIGNED BY HEI
DRAWN BY HEI
REVIEWED BY HEI
DATE FEBRUARY 2005
SCALE NONE

TRAVIS COUNTY WATER CONTROL & IMPROVEMENT DISTRICT NO. 10
PUMP STATION NO. 1

PUMP MOTOR "P-7" CONTROL SCHEMATIC
(SHEET 5 OF 5)

JOB NO. 2002-210 | SHEET 93 | DWG NO. E-CWS-041